CLARK COUNTY - COMMUNITY DEVELOPMENT
BUILDING SAFETY
EXAMPLE OF A PRESCRIPTIVE HOUSE PLAN
BASED ON THE 2015 IRC
EFFECTIVE UNTIL JULY 2020

These plans are provided as a sample for assisting applicants in creating submittal document. These plans are based on the prescriptive criteria set forth in the 2015 international residential code (irc)/washington state admendments (wac). If the structure does not meet all of the irc/wac requirements, an engineered design conforming to the 2015 international building code (ibc)/wac must be submitted. Plans are also to show compliance with the 2015 Washington State Energy Code (WSEC) http://www.energy.wsu.edu/BuildingEfficiency/EnergyCode.aspx

Residential Structural Design Information:

WIND
- minimum design wind speed = 135 mph, exposure B

SOIL
- 1,500 psf bearing (default minimum)

FROST
- 12" minimum

MINIMUM ROOF SNOW DESIGN LOAD
- 25 psf - minimum roof load - non reducible
- 30 psf - ground snow - drift calculations as required

DESIGN TEMPERATURES
- winter 22° f/summer 88° f
- battle ground and camas 19° f/summer 91 °f

SEISMIC ZONE
- D1 for prescriptive/ D for engineering design

ROOF DRAINAGE
- Per uniform plumbing code (UPC) 1101.12
- roof drainage system shall be designed for 2" per hour rainfall

FLOOD HAZARD
- FEMA maps of local area

All other loading is per the 2015 international residential code and as adopted by the Washington State Amendments (WAC)

INFORMATION PURPOSES ONLY
SAMPLE NOT FOR CONSTRUCTION

SHEET TITLE:

1 Site Plan Example
2 Floor Plan Example
2A Wall Bracing Example
3 Elevations Example
4 Foundation Plan Example
5 Roof Framing Plan Example
6 Roof Plan Example
7 Cross Section Example
8 Detail Example
9 Detail Example
10 Detail Example
11 Detail Example
12 Detail Example
13 Detail Example
14 Detail Example
15 Washington State Energy Code (WSEC) form downloaded from https://www.clark.wa.gov/sites/default/files/dept/files/community-development/building/2018-CCBS-WSEC-Energy-Plan-Sheet.pdf

Supplemental Submittals
Prescriptive worksheet, glazing schedule and heating system sizing worksheet downloaded http://www.energy.wsu.edu/BuildingEfficiency/EnergyCode.aspx

Some of the details in this sample packet may be downloaded at.
http://sww-icc.org/Documents/2015%20IRC%20Details/15IRC.htm

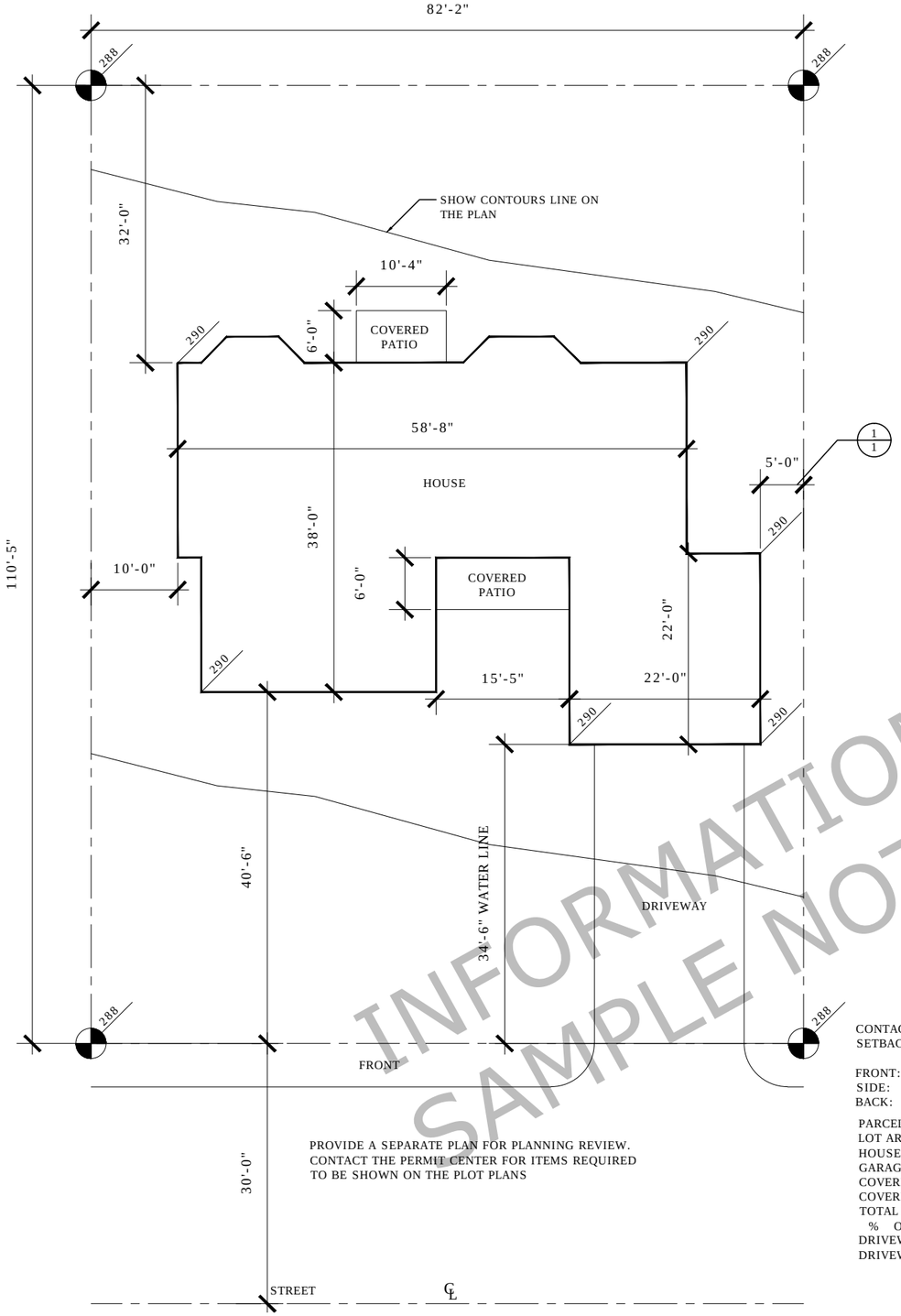

PROVIDE A SEPARATE PLAN FOR PLANNING REVIEW.
CONTACT THE PERMIT CENTER FOR ITEMS REQUIRED
TO BE SHOWN ON THE PLOT PLANS

CONTACT ZONING REGARDING THE FOLLOWING:
SETBACK:

FRONT:
SIDE:
BACK:

PARCEL NUMBER:
LOT AREA:
HOUSE AREA:
GARAGE AREA:
COVERED PATIO AREA:
COVERED ENTRY:
TOTAL BUILDING:
% OF LOT COVERAGE:
DRIVEWAY AREA:
DRIVEWAY AND BUILDING AREA:

SITE PLAN EXAMPLE
SCALE 1" = 50'

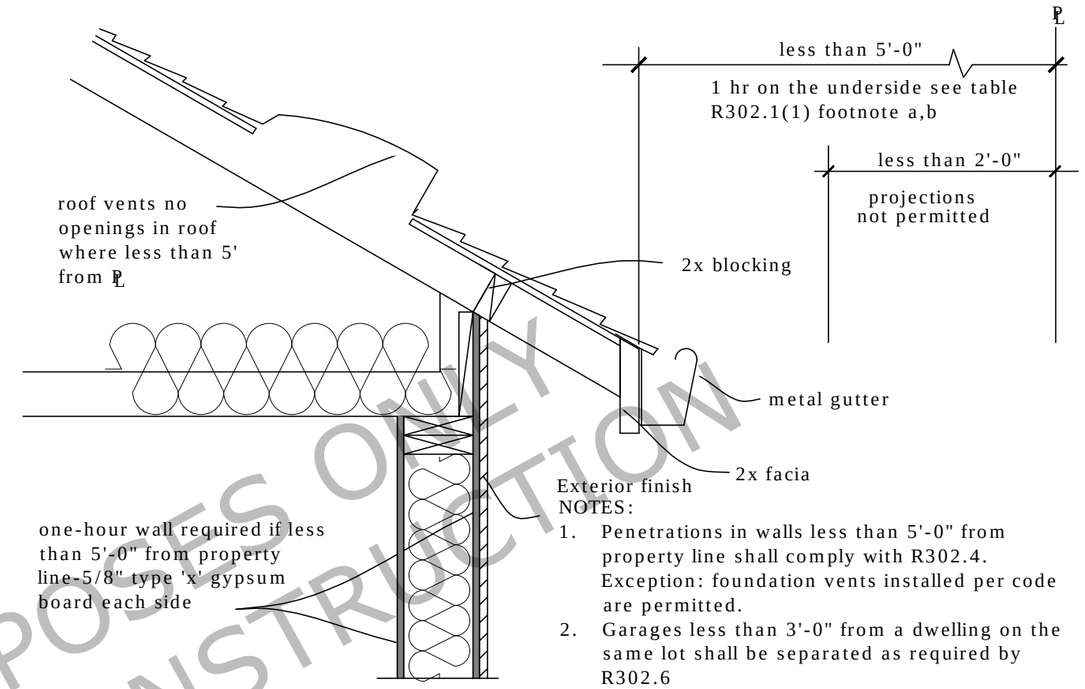

NOTES:

1. Penetrations in walls less than 5'-0" from property line shall comply with R302.4. Exception: foundation vents installed per code are permitted.
2. Garages less than 3'-0" from a dwelling on the same lot shall be separated as required by R302.6

Table R302.1(1) Exterior Walls WAC Non-sprinklered

exterior wall element	exterior wall element	minimum fire-resistance rating	minimum fire separation distance
Walls	(fire-resistance rated)	1-hour tested in accordance with ASTM E119 or UL 263 with exposure from both sides	<5'-0"
	(not fire-resistance rated)	0 hours	≥ 5'-0"
Projections	Not allowed	N/A	< 2'-0"
	(fire-resistance rated)	1 hour on the underside (a,b)	≥2'-0" to < 5'-0"
	(not fire-resistance rated)	0 hours	≥ 5'-0"
Openings in walls	Not allowed	N/A	< 3'-0"
	25% maximum of wall area per story	0 hours	3'-0"
	unlimited	0 hours	5'-0"
Penetrations	All	comply with section R302.4	<3'-0"
	All	none required	3'-0"

Table R302.1(1) footnote:

a. Roof eave fire-resistance rating shall be permitted to be reduced to 0 hours on the underside of the eave if fire blocking is provided from the wall top plate to the underside of the roof sheathing.
b. Roof eave fire-resistance rating shall be permitted to be reduced to 0 hours on the underside of the eave provided no gable vent openings are installed.

1/1 PROPERTY LINE PROTECTION IRC R302.1
SCALE: NTS

FR-6

INFORMATION PURPOSES ONLY
SAMPLE NOT FOR CONSTRUCTION

CLARK COUNTY - COMMUNITY DEVELOPMENT
BUILDING SAFETY
1300 FRANKLIN ST., VANCOUVER, WA 98660

SHEET NUMBER
1

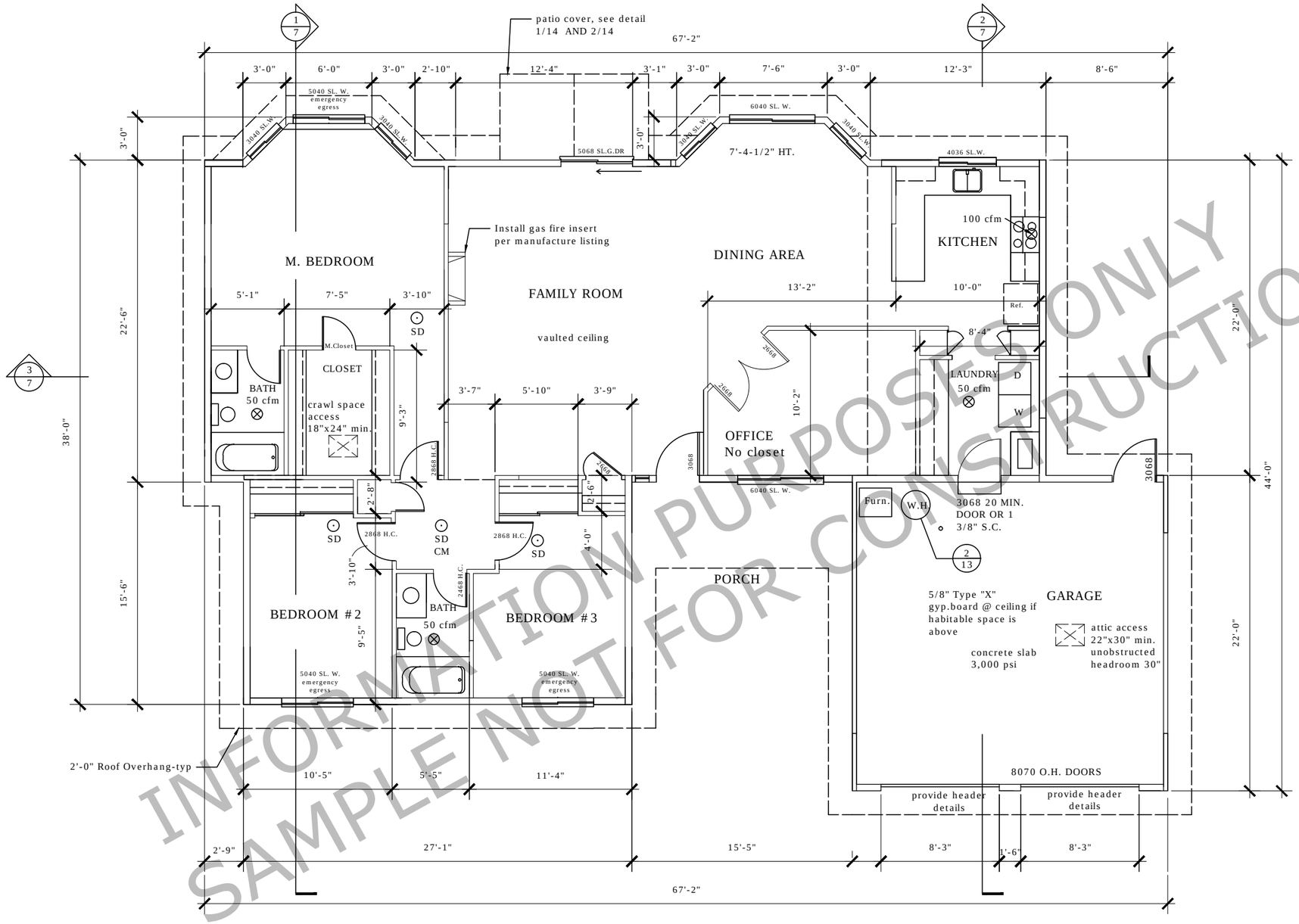

INFORMATION PURPOSES ONLY
SAMPLE NOT FOR CONSTRUCTION

LEGEND

SMOKE DETECTOR	SD
SMOKE DETECTOR/CARBONMONOXIDE	SD/CM

BUILDING AREA

Residence	1,796 square feet
Garage	484 square feet
Patio cover	154 square feet
Total area	2,434 square feet

GENERAL NOTES:

1. R315.1 Carbon Monoxide Alarms
   An approved carbon monoxide alarm shall be installed outside of each separate sleeping area in the immediate vicinity of the bedroom(s)

2. R314.3 Smoke Alarm Locations
   Smoke alarms shall not be installed in the following locations unless this would prevent placement of a smoke alarm in a location required by Section R314.3.
   - Less than 3 feet horizontally from the door or opening of a bathroom that contains a bathtub or shower.
   - Ionization smoke alarms shall not be installed less than 20 feet horizontally from a permanently installed cooking appliance.
   - Ionization smoke alarms with an alarm-silencing switch shall not be installed less than 10 feet horizontally from a permanently installed cooking appliance.

FLOOR PLAN EXAMPLE
SCALE $\frac{1}{4}$" = 1'-0"

CLARK COUNTY - COMMUNITY DEVELOPMENT
BUILDING SAFETY
1300 FRANKLIN ST., VANCOUVER, WA 98660

SHEET NUMBER
2

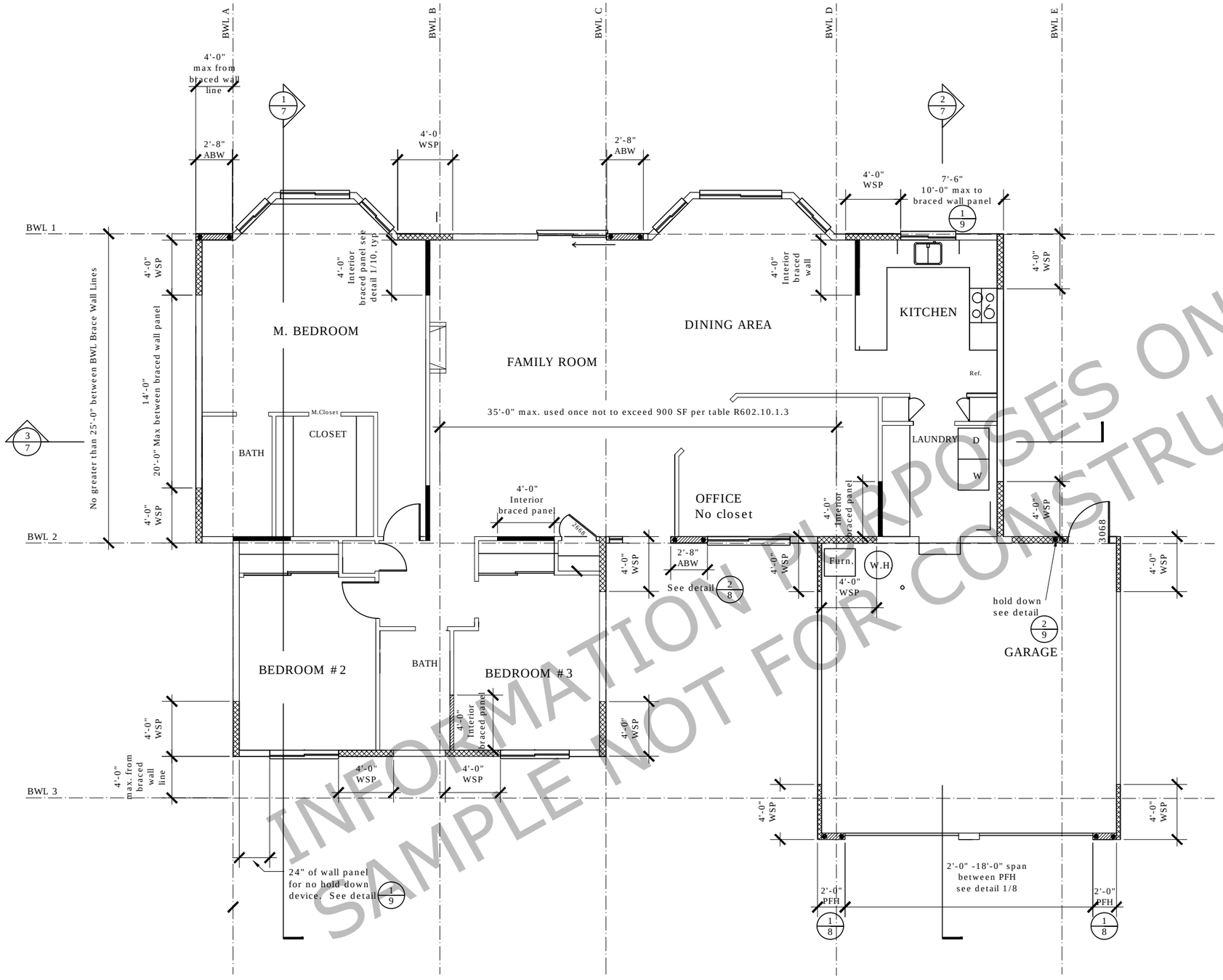

LEGEND

- 4'-0" WSP WOOD STRUCTURAL PANEL
- 4'-0" INTERIOR BRACE PANEL
- 2'-8" ABW ALTERNATE BRACED WALL
- HOLD DOWN

	Bracing Wall Methods references table R602.3 (1), R602.3(3), R602.10.4, R602.10.6.1				
	Methods, Material	Min. thickness sheathing	Fastners	Spacing	Hold downs force
Intermittent Bracing Methods	WSP wood structural panel	0'-0 3/8"	Ext. 6d common	6" edges, 12" field	
			Int. 6d common	6" edges, 12 field	
	GB Gypsum board Interior & exterior can not be used with cont. sheathing method	0'-0 1/2"	1 ½" galvanized roofing nail; staple galvanized	7" edges, 7" field	
	ABW Alternate braced wall panel min. 2'-8"	0'-0 3/8"	One story 8d First of two stories 8d common	6" edges, 12" field 4" edges, 12" field	(2) 1,800 pounds (2) 3,000 pounds
	PFH portal frame with hold-downs	0'-0 3/8"	8d common or galvanized	3" in all framing (studs, blocking and sills) typ.	(2) 3,500 pounds

INFORMATION PURPOSES ONLY
SAMPLE NOT FOR CONSTRUCTION

WALL BRACING EXAMPLE
SCALE $\frac{1}{4}$" = 1'-0"

CLARK COUNTY - COMMUNITY DEVELOPMENT
BUILDING SAFETY
1300 FRANKLIN ST., VANCOUVER, WA 98660

SHEET NUMBER
2A

FRONT ELEVATION

General Elevation Notes:

1. Exterior Headers shall be insulated with a minimum of R-10 Insulation.
   Double 2x Header Sandwiched between or 4x Header in 6x Wall or provide a component analysis.

2. Flashing Requirements:
   a. Galvanized flashing required above belly bands, window and door trim, decks and all other similar projections.
   b. Windows are required to be installed, properly flashed, and inspected prior to cover.
   c. Request flashing under miscellaneous inspection, IVR code 420.
   d.
3. Window Fall Protection - Window Height R312.2.1
   a. 6' above grade or the surface below
   b. Between the finished floor and 24" above [it].
   c. Shall be fixed or have openings that do not allow the passage of a 4" sphere.

   Exception:
   a. Less than 4" opening
   b. Window fall prevention devices
   c. Window opening controls per R312.2.2

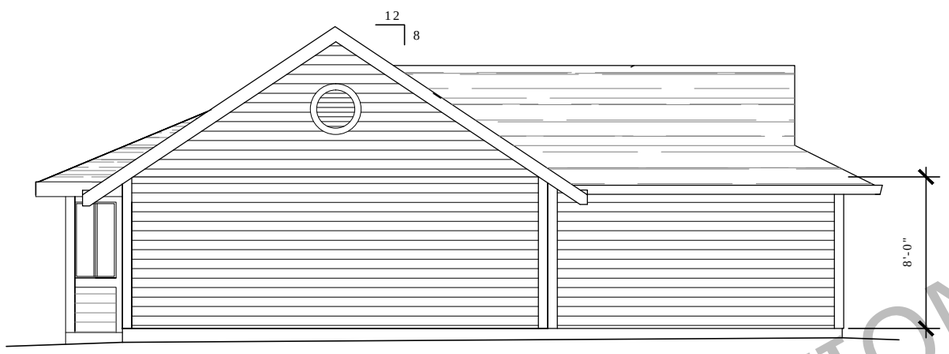

LEFT ELEVATION

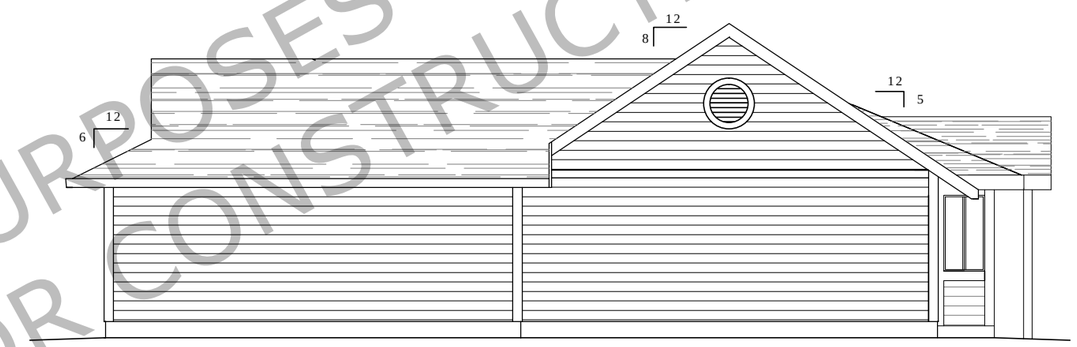

RIGHT ELEVATION

REAR ELEVATIONS

*APPLICANT TO PROVIDE ELEVATIONS AT $\frac{1}{4}$" = 1'-0"

INFORMATION PURPOSES ONLY
SAMPLE NOT FOR CONSTRUCTION

ELEVATION SAMPLE ONLY
*SCALE $\frac{1}{4}$" = 1'-0"

CLARK COUNTY - COMMUNITY DEVELOPMENT
BUILDING SAFETY
1300 FRANKLIN ST., VANCOUVER, WA 98660

SHEET NUMBER
3

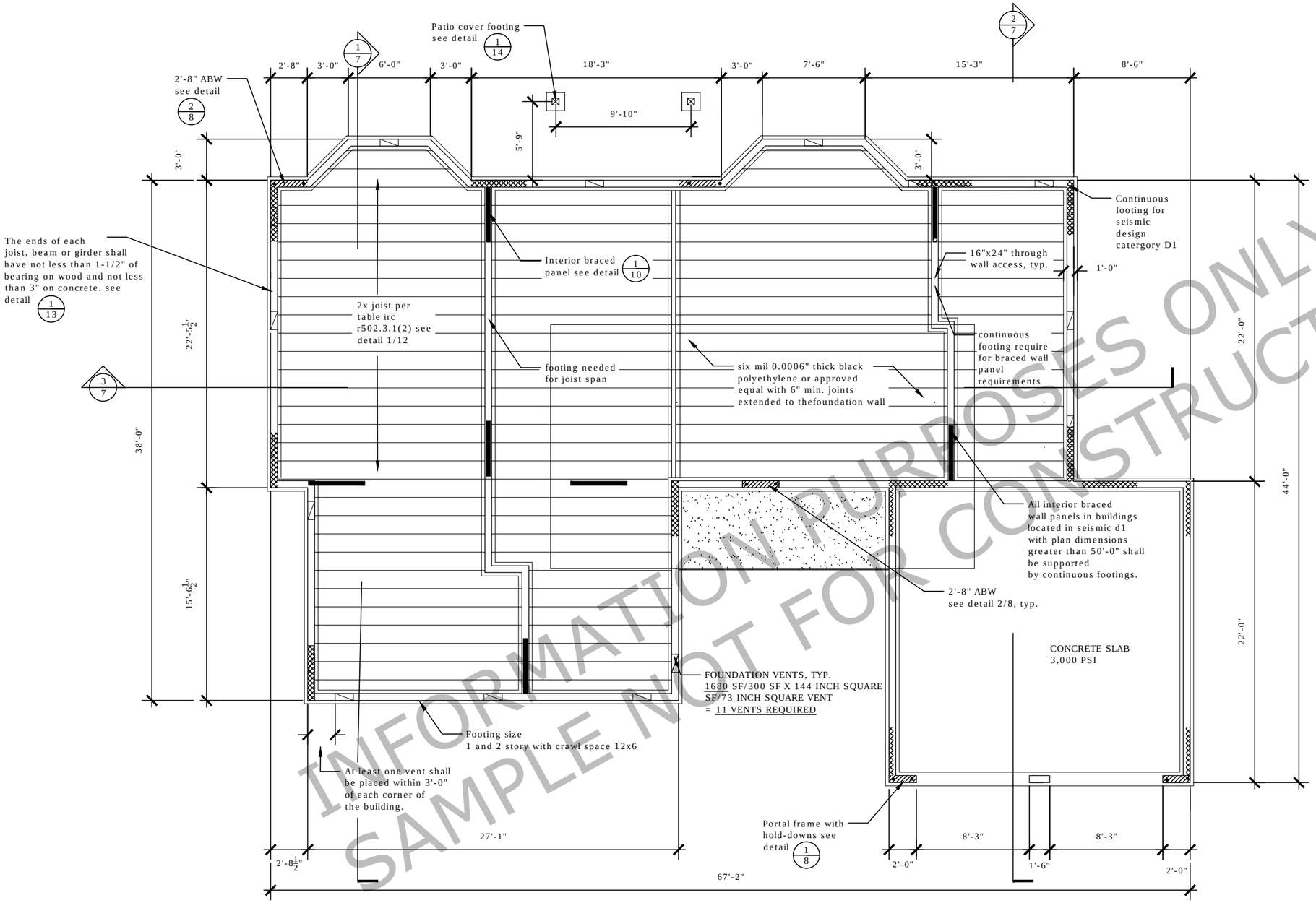

INFORMATION PURPOSES ONLY
SAMPLE NOT FOR CONSTRUCTION

GENERAL NOTES:

1. Foundation access required 18"x24" through floor & openings through perimeter shall be 16"x24"-IRC 408.3
2. Concrete to be 3,000 psi for foundation walls, exterior walls and other vertical concrete work exposed to the weather and for concrete slabs of garage floors. Concrete to be 2,500 psi for foundations not exposed to concrete. see the 2015 IRC table R402.2.
3. Exterior footings-min. 12" depth
4. Foundation ventilation shall be one sq.ft. for every 300 sq.ft.- one vent opening shall be within 3' of every corner per the 2015 IRC/WAC R408.2
5. Provide radon ventilation see details 1/11 and 2/11
6. R502.6 bearing.
   the ends of each joist, beam or girder shall have not less than 1.5 inches of bearing on wood or metal and not less than 3 inches on masonry or concrete except where supported on a 1-inch by 4-inch ribbon strip and nailed to the adjacent stud or by the use of approved joist hangers. the bearing on masonry or concrete shall be direct, or a sill plate of 2-inch-minimum nominal thickness shall be provided under the joist, beam or girder.
7. General storm drain code requirements:
   low point drain with backwater valve to slope min 2% away to an approved discharge location.
   Rain drain piping to be dwv-schedule 40, pvc, or abs. engineered drainage systems must be followed and posted for inspections.
8. R502.7 Lateral Restraint (Blocking) at supports
   Joists shall be supported laterally at the ends by full-depth solid blocking not less than 2″ nominal in thickness; or by attachment to a full depth header, band or rim joist, or to an adjoin stud or shall be otherwise provided with lateral support to prevent rotation.
   In Seismic Design Categories D1, lateral restraint shall be provided at each intermediate support.

FOUNDATION EXAMPLE PLAN
SCALE $\frac{1}{4}$" = 1'-0"

CLARK COUNTY - COMMUNITY DEVELOPMENT
BUILDING SAFETY
1300 FRANKLIN ST., VANCOUVER, WA 98660

SHEET NUMBER
4

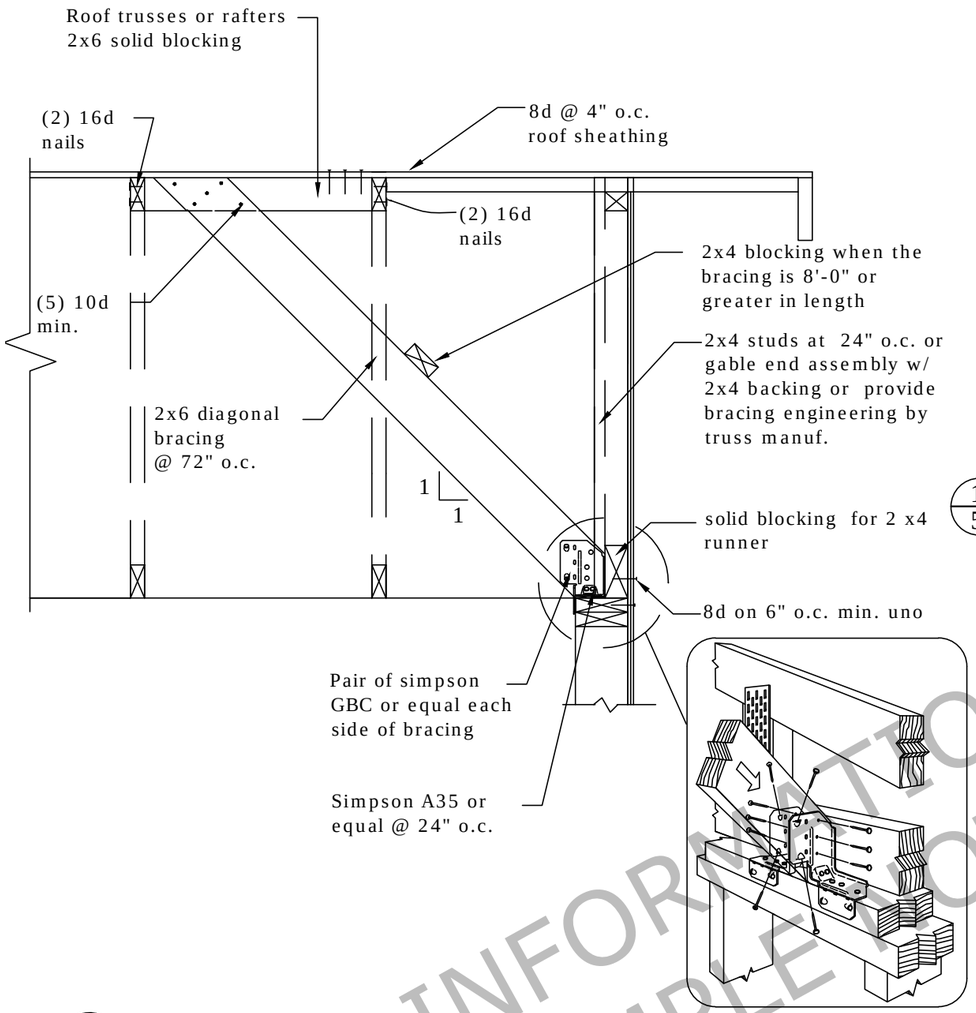

1/5 GABLE END BRACING
SCALE: NTS

RESIDENTIAL CONSTRUCTION GUIDE 9/13

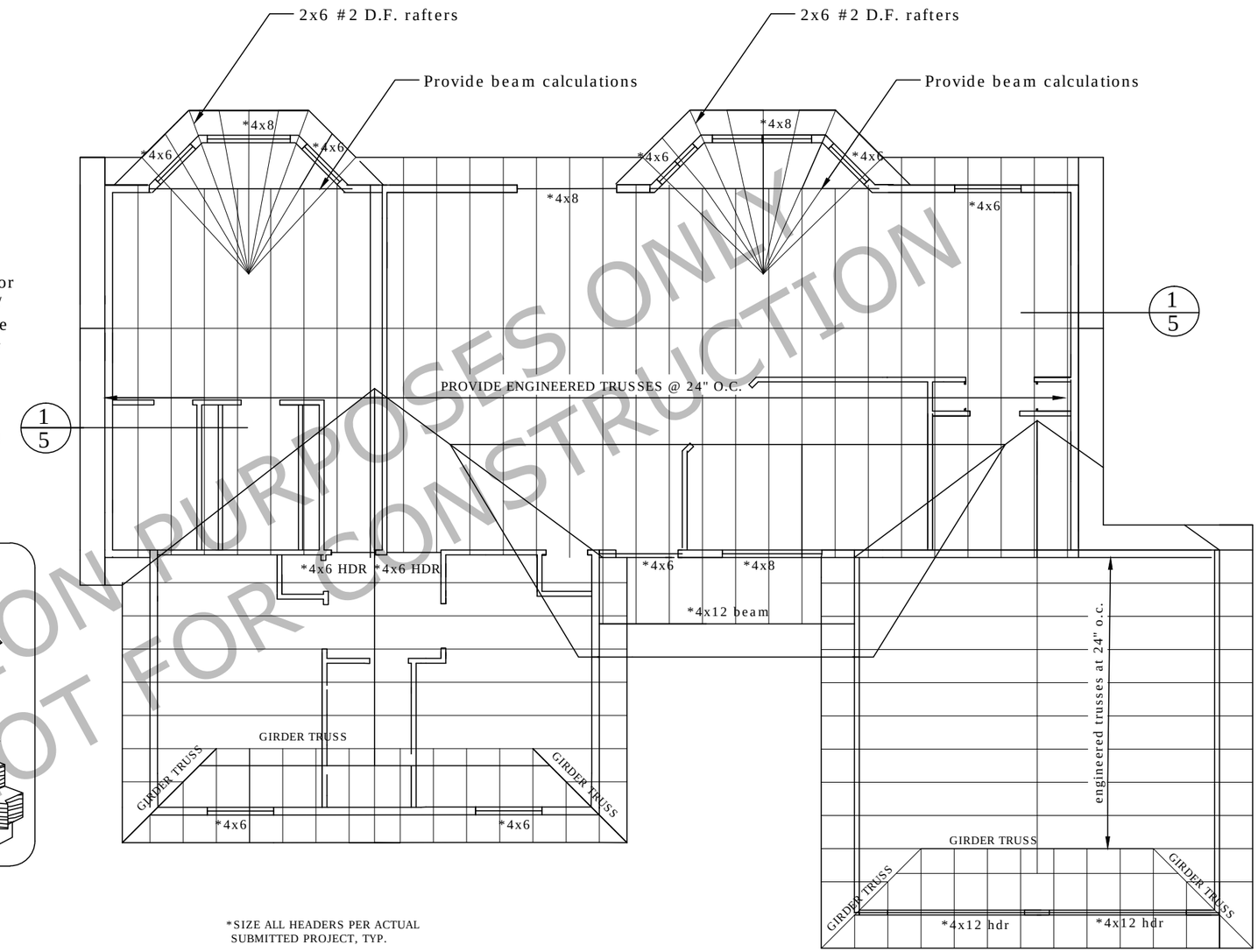

*SIZE ALL HEADERS PER ACTUAL
SUBMITTED PROJECT, TYP.

INFORMATION PURPOSES ONLY
SAMPLE NOT FOR CONSTRUCTION

ROOF FRAMING PLAN EXAMPLE
SCALE 1/8" = 1'-0"

CLARK COUNTY - COMMUNITY DEVELOPMENT
BUILDING SAFETY
1300 FRANKLIN ST., VANCOUVER, WA 98660

SHEET NUMBER
5

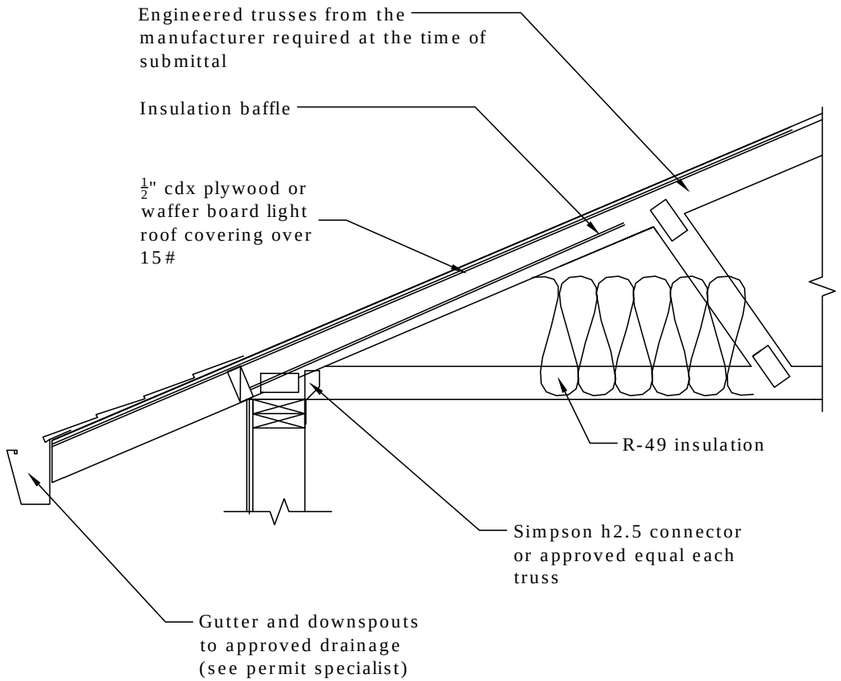

2/6 TYPICAL EAVE DETAIL
SCALE:1/2" = 1'-0"

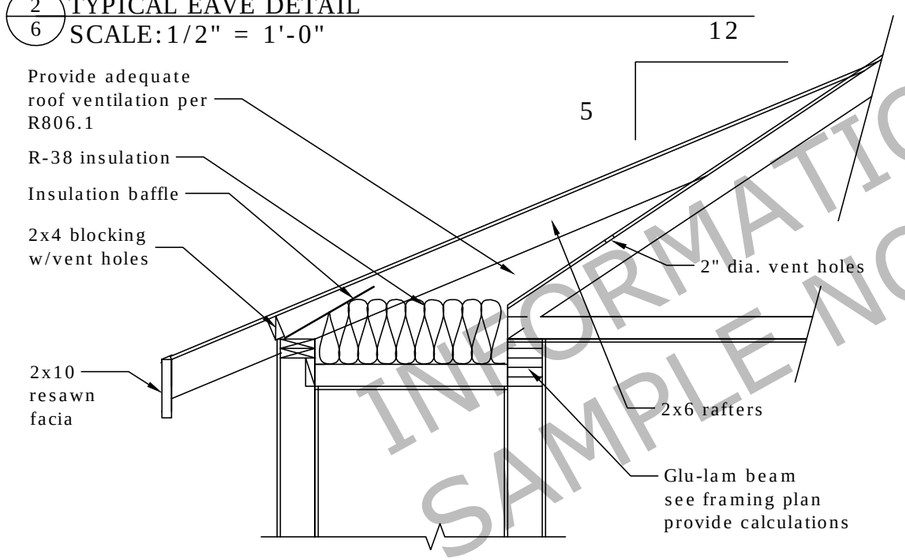

1/6 EAVE DETAIL @ BAY WINDOW
SCALE:1/2" = 1'-0"

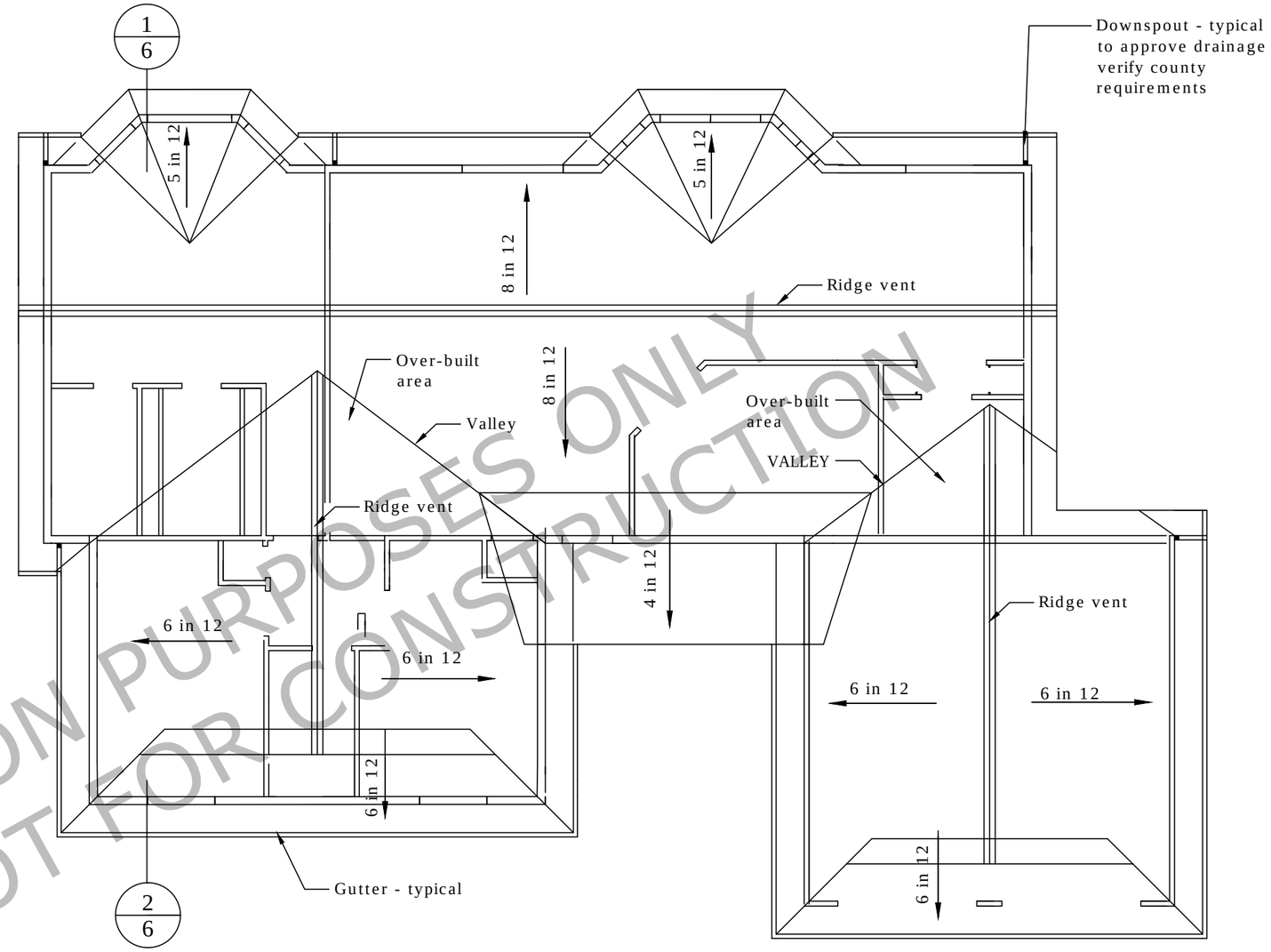

1/6 ROOF PLAN
SCALE:1/8" = 1'-0"

ROOF VENTILATION

Net free ventilation required 1/150of roof area -using exeception- 1/300 of roof area provide using 1/2 of required (1796/300) 6.0 s.f. at eave and 1/2 over 3'above eave

INFORMATION PURPOSES ONLY
SAMPLE NOT FOR CONSTRUCTION

ROOF PLAN EXAMPLE
SCALE 1/8" = 1'-0"

CLARK COUNTY - COMMUNITY DEVELOPMENT
BUILDING SAFETY
1300 FRANKLIN ST., VANCOUVER, WA 98660

SHEET NUMBER
6

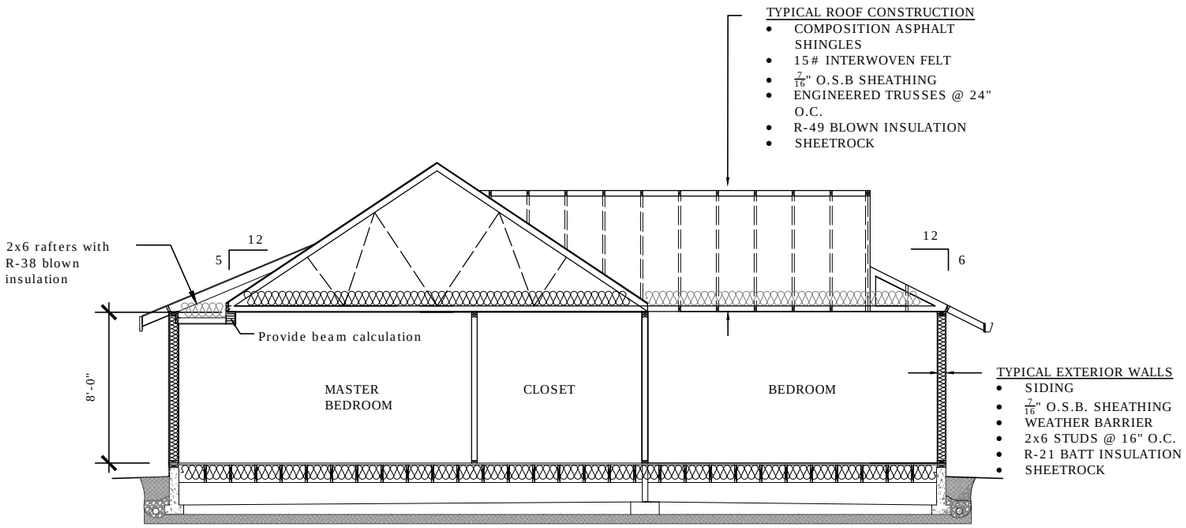

1/7 CROSS SECTION
SCALE: 1/4" = 1'-0"

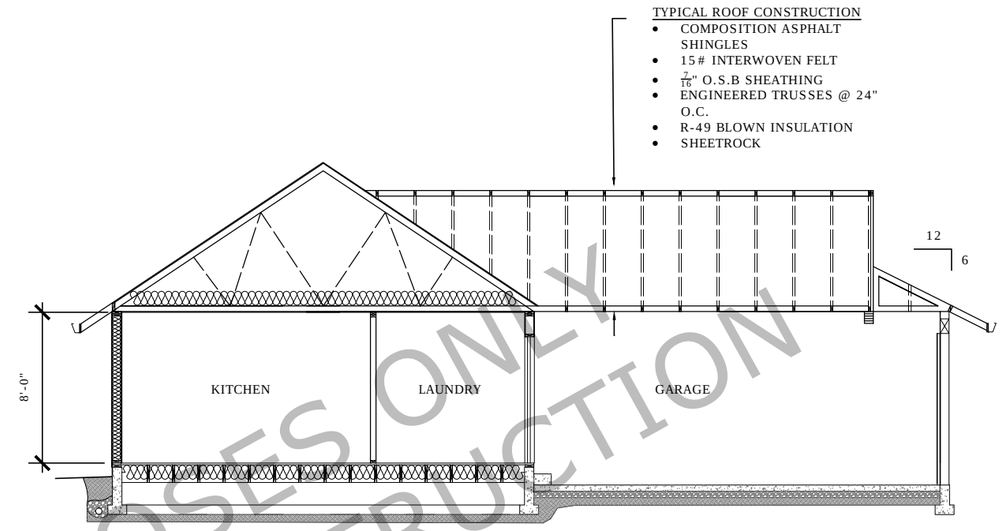

2/7 CROSS SECTION
SCALE: 1/4" = 1'-0"

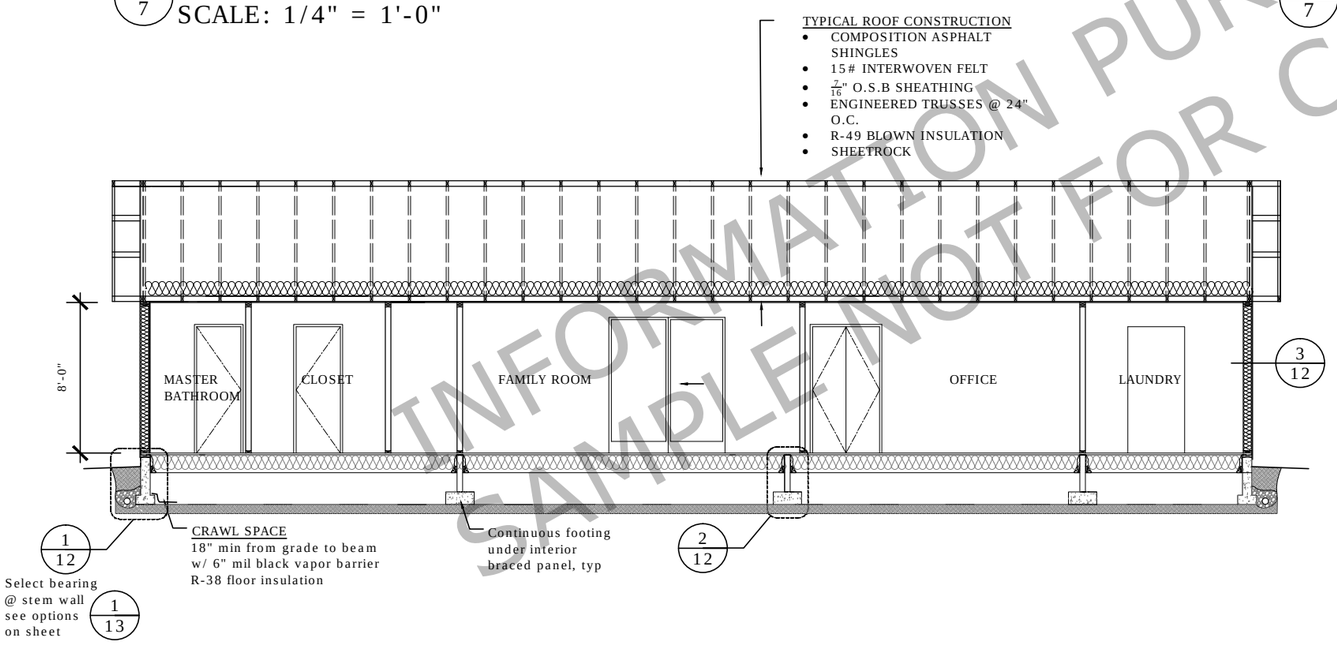

3/7 CROSS SECTION
SCALE: 1/4" = 1'-0"

*APPLICANT TO PROVIDE SECTIONS AT 1/4" = 1'-0"

INFORMATION PURPOSES ONLY
SAMPLE NOT FOR CONSTRUCTION

CROSS SECTION EXAMPLE ONLY
SCALE 1/4" = 1'-0"

CLARK COUNTY - COMMUNITY DEVELOPMENT
BUILDING SAFETY
1300 FRANKLIN ST., VANCOUVER, WA 98660

SHEET NUMBER
7

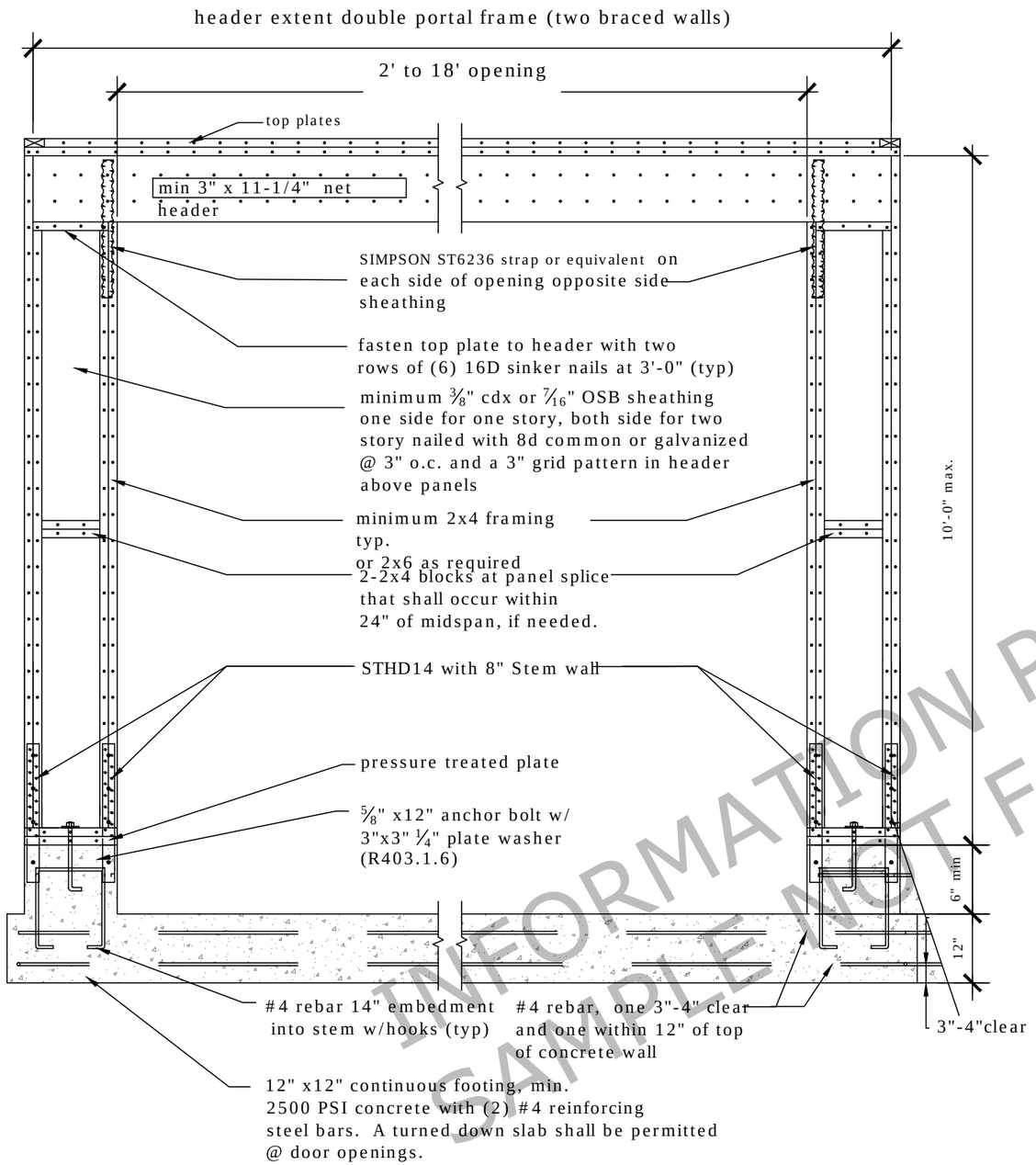

minimum width 16" for one story, 24" for first level of two story

1/8 PORTAL FRAME with HOLD-DOWNS (DOUBLE) R602.10.6.2
SCALE: NTS
SW-16D

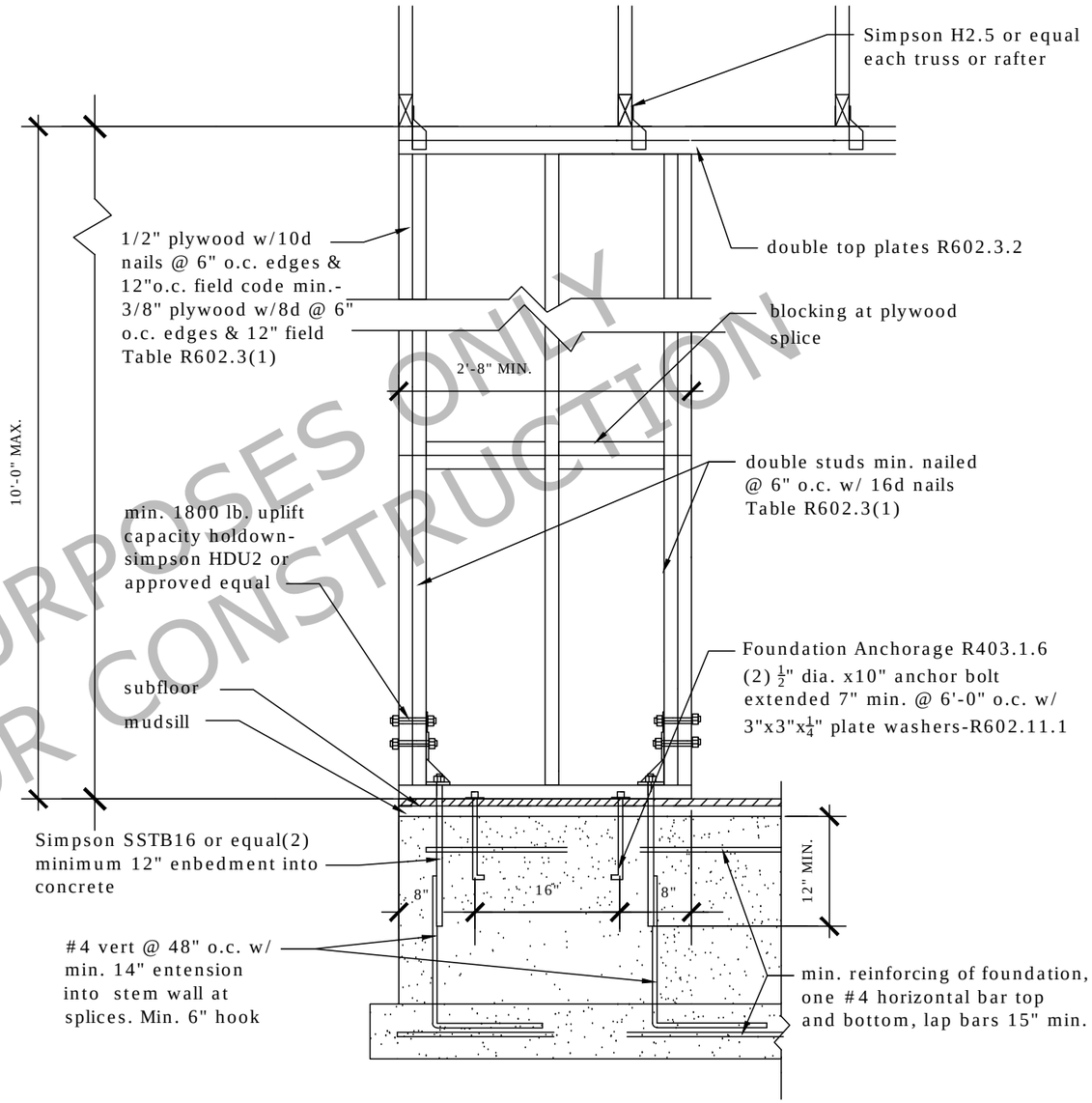

2/8 ALTERNATE BRACED WALL PANEL (ABW) R602.10.6.1
SCALE: NTS
SW-32-1B

INFORMATION PURPOSES ONLY
SAMPLE NOT FOR CONSTRUCTION

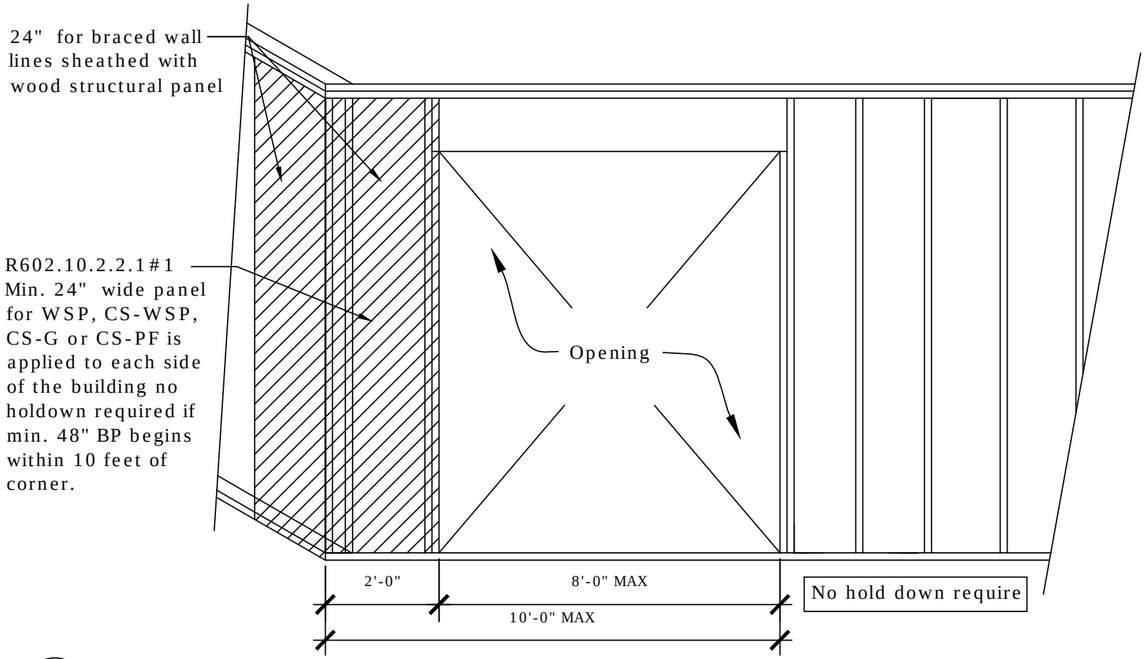

1/9 BRACED WALL LINES AT THE CORNERS IRC FIGURE R602.10.7
SCALE: NTS
SW-48-C-1

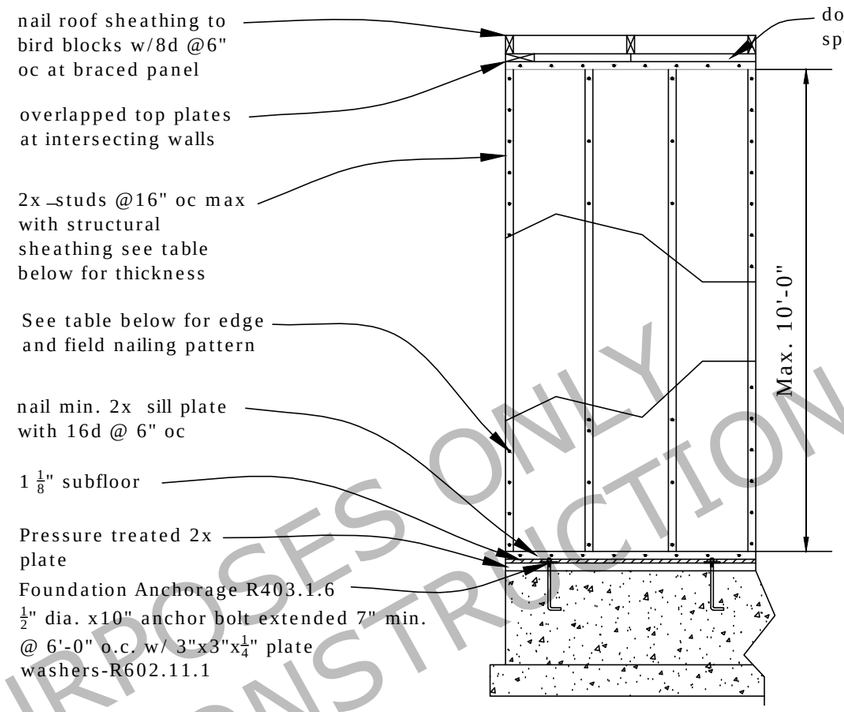

NOTES

1. All vertical panel joints shall occur over, and be fastened to common studs R602.10.10
2. All horizontal joints shall occur over, and be fastened to common blocking of minimum 1 1/2" nominal thickness.
3. See R602.10.2.2.1 for braced wall panels locations
4. Panel method see table belo
5. For masonry stem wall see R602.10.9 #3.
6. Clark County is in Seismic Design D1.

3/9 MIN 48" CONTINOUSLY SHEATHED WOOD STRUCTURAL PANEL (WSP) IRC R602.10.2
SCALE: NTS
BWP-48

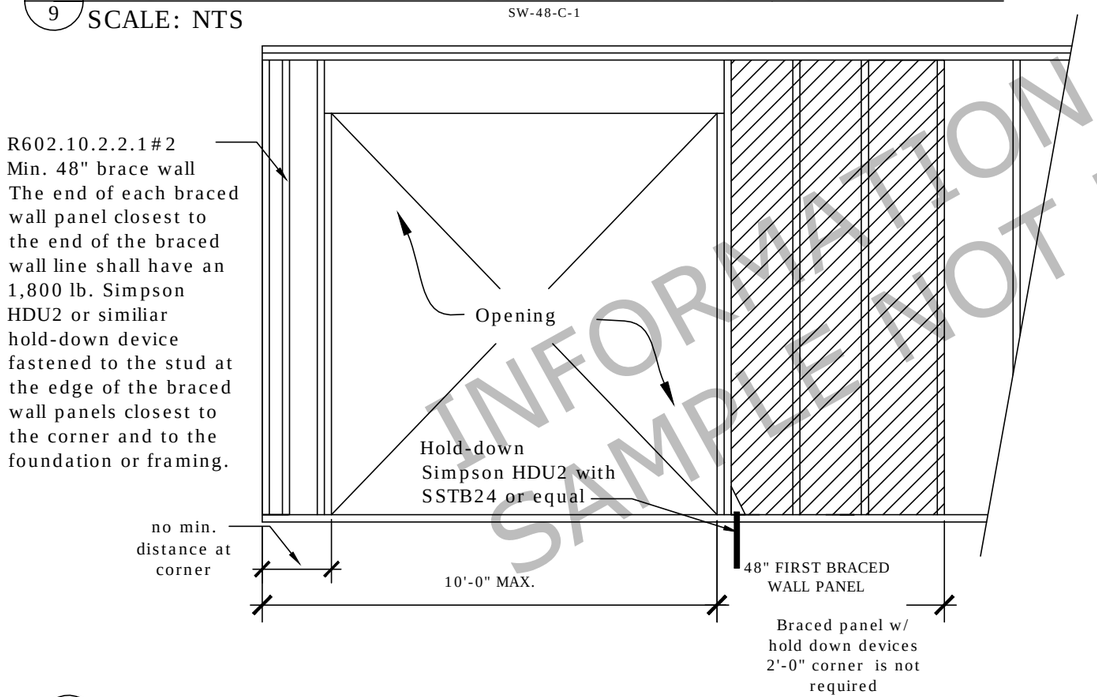

2/9 BRACED WALL LINES AT THE CORNERS IRC R602.10.7
SCALE: NTS
SW-48-C-2

INFORMATION PURPOSES ONLY
SAMPLE NOT FOR CONSTRUCTION

TYPICAL DETAILS

CLARK COUNTY - COMMUNITY DEVELOPMENT
BUILDING SAFETY
1300 FRANKLIN ST., VANCOUVER, WA 98660

SHEET NUMBER
9

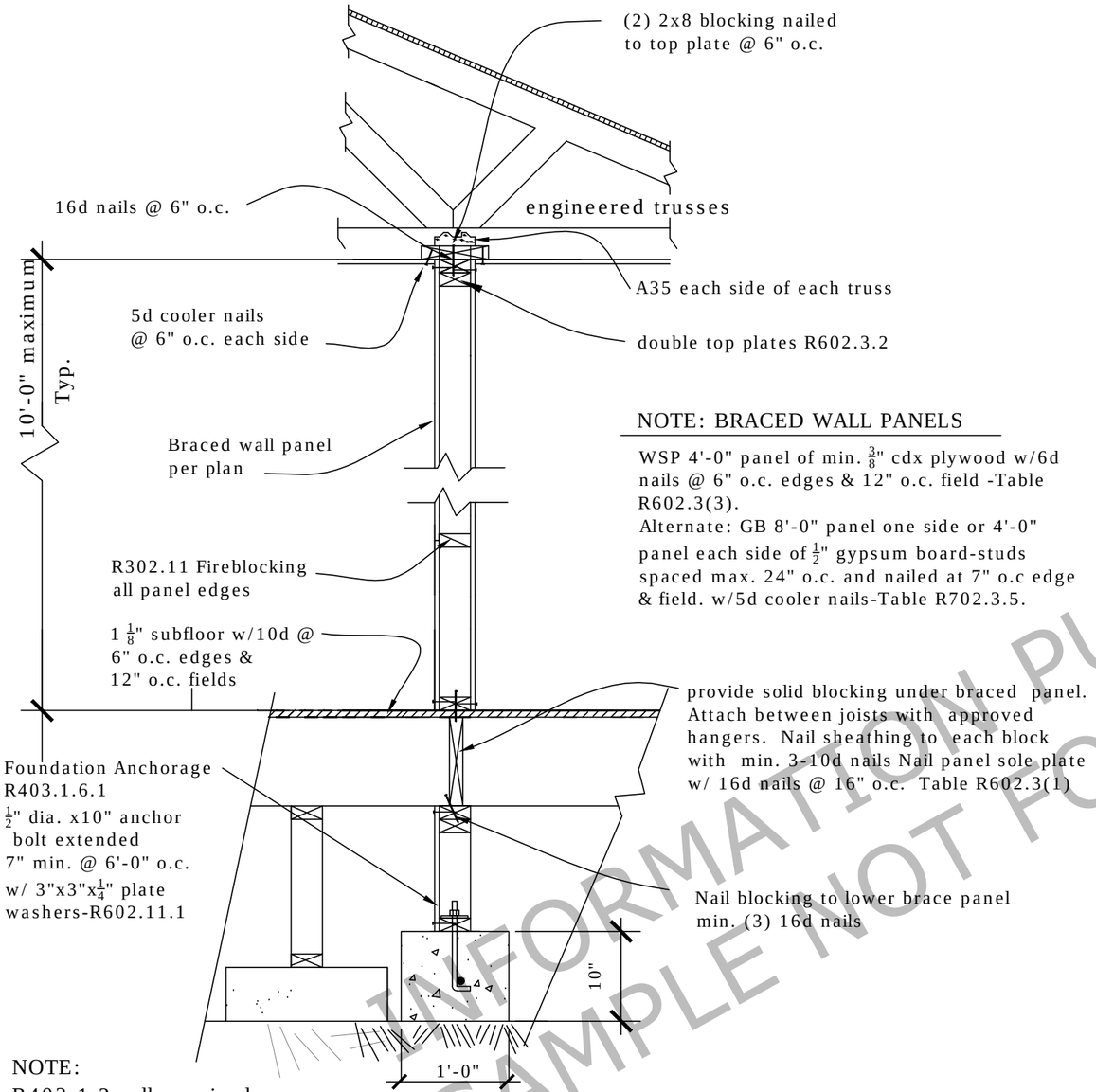

NOTE: BRACED WALL PANELS

WSP 4'-0" panel of min. $\frac{3}{8}$" cdx plywood w/6d nails @ 6" o.c. edges & 12" o.c. field -Table R602.3(3).
Alternate: GB 8'-0" panel one side or 4'-0" panel each side of $\frac{1}{2}$" gypsum board-studs spaced max. 24" o.c. and nailed at 7" o.c edge & field. w/5d cooler nails-Table R702.3.5.

NOTE:
R403.1.2- all required interior braced wall panels shall be supported on footings at intervals not exceeding 50'-0"

Interior Braced Wall Panels
(w/joists or rafters perpendicular to panels)

1/10 INTERIOR BRACED WALL - 48"
SCALE: NTS

FRM-25

INFORMATIONAL PURPOSES ONLY
SAMPLE NOT FOR CONSTRUCTION

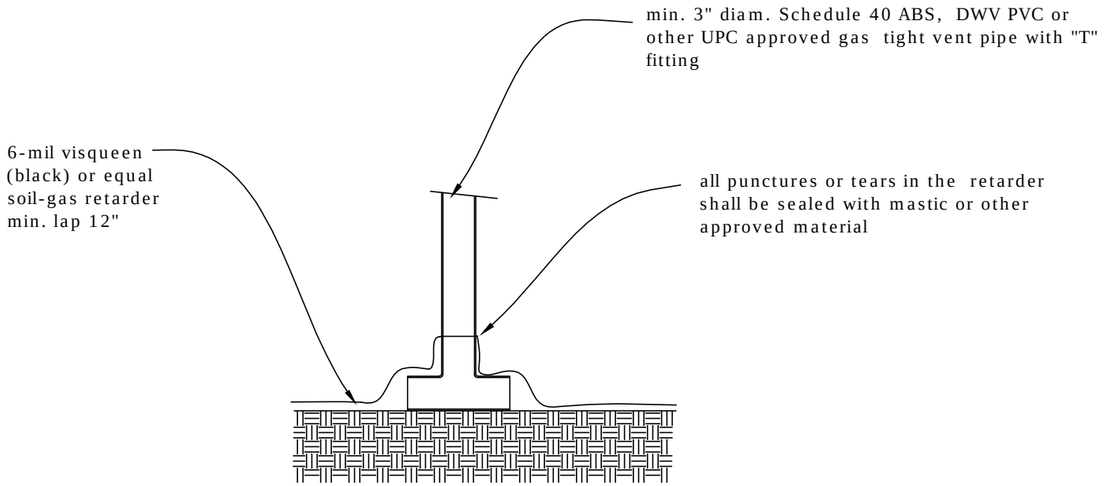

Radon Vent Pipe @ Crawl Space

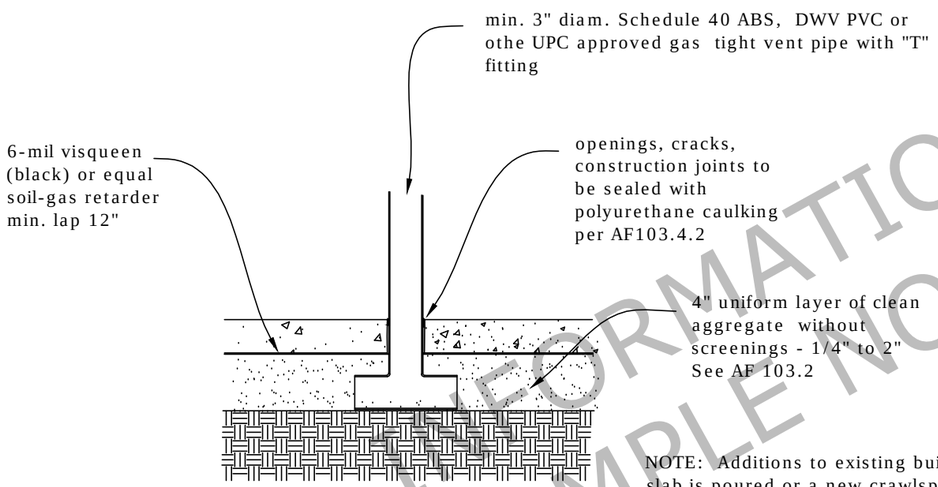

NOTE: Additions to existing building, were a new slab is poured or a new crawlspace is being constructed with living space above, radon mitigation is required.

Radon Vent Pipe @ Slab

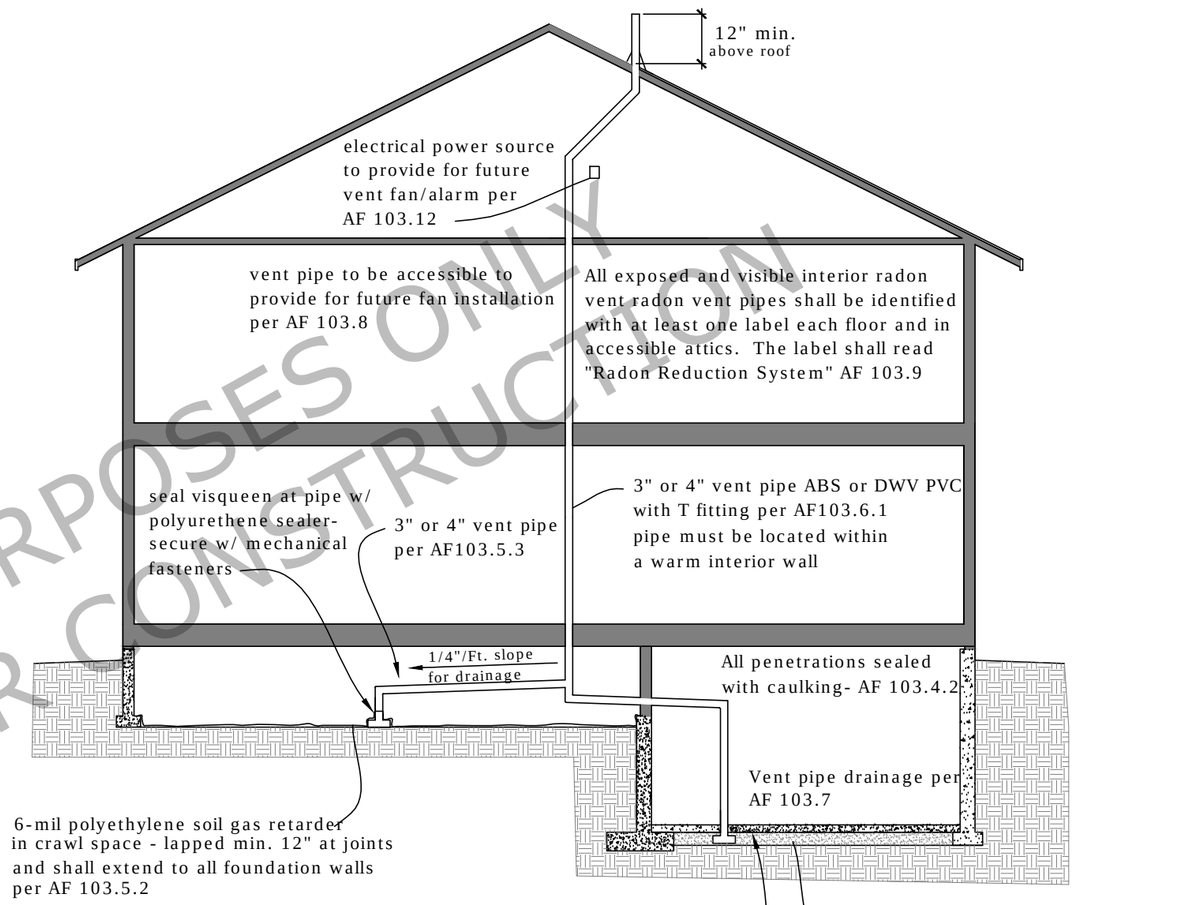

NOTE:

1. Install radon vent pipes per UPC (Chapter 7 Drain piping), for materials, fitting & installation requirements
2. Multiple vent pipes per AF 103.5.2.
3. Combination basement and crawl shall have separate vent pipes in each area per AF 103.10.

Radon Requirements at slab and crawl space

1/11 RADON REQUIREMENTS AF 103
SCALE: NTS
MSC-60

2/11 RADON REQUIREMENTS AF 103
SCALE: NTS
MSC-61

INFORMATION PURPOSES ONLY
SAMPLE NOT FOR CONSTRUCTION

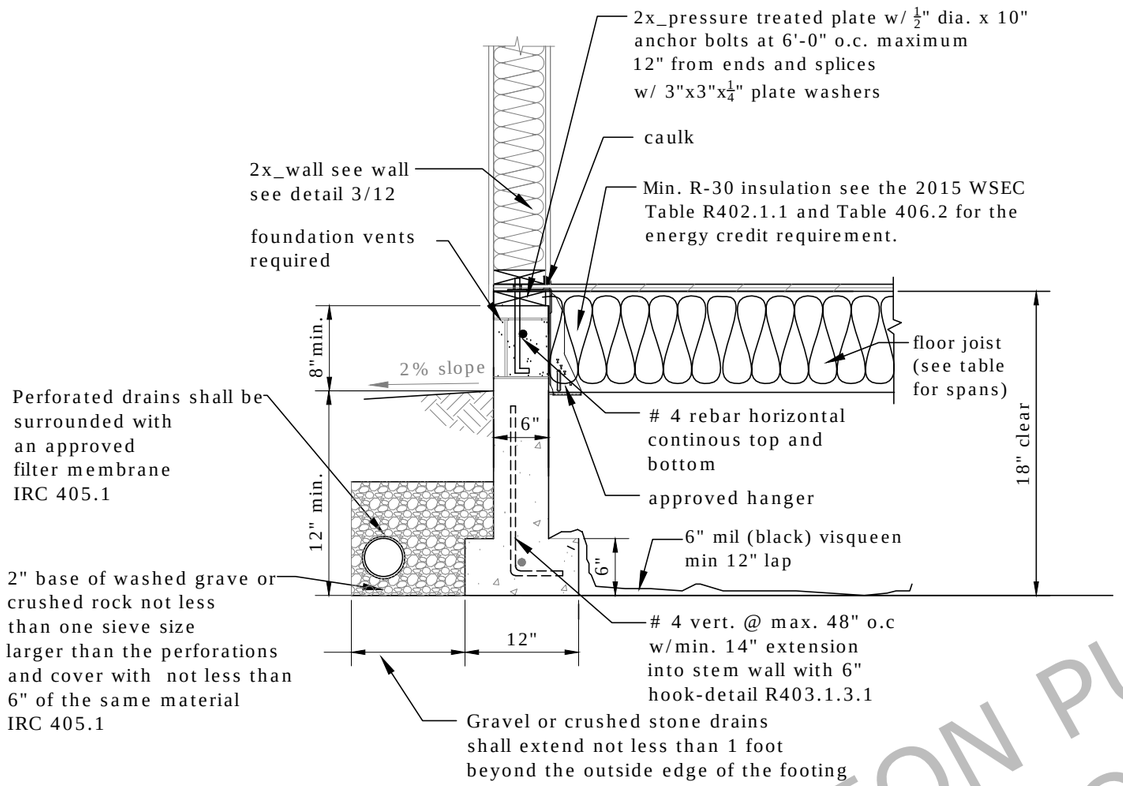

Table R502.3.1(2)			
Floor joist	12" o.c.	16" o.c.	24" o.c.
2x6	10'-9"	9'-9"	8'-3"
2x8	14'-2"	12'-9"	10'-5"
2x10	18'-0"	15'-7"	12'-9"
2x12	20'-11"	18'-1"	14'-9"

Table R503.2.1 Subfloor spans			
	16" o.c.	20" o.c.	24" o.c.
grade 1	1/2"	5/8"	3/4"

NOTES:
1. Floor joist to be minimum Douglas Fir #2. Code loading requirements- 40# live and 10# dead. Not for exterior deck see IRC R507 and the deck detail package.
2. Minimum spans for subfloor-underlayment see subfloor span table this sheet.
3. Minimum concrete strength 2500 psi, lap rebar min. 30" diam. at slices-secure with tie wire.
4. Foundation vents required 1sf for each 300 s.f. of under-floor area-distribute approximately equally on at least two sides. Recommend starting placement within 3' of corners. IRC R408.
5. See the fastener schedule IRC Table R602.3(1) for all other connections.

1/12 FOUNDATION/FLOOR FRAMING
SCALE: NTS
RESIDENTIAL CONSTRUCTION GUIDE 5/13

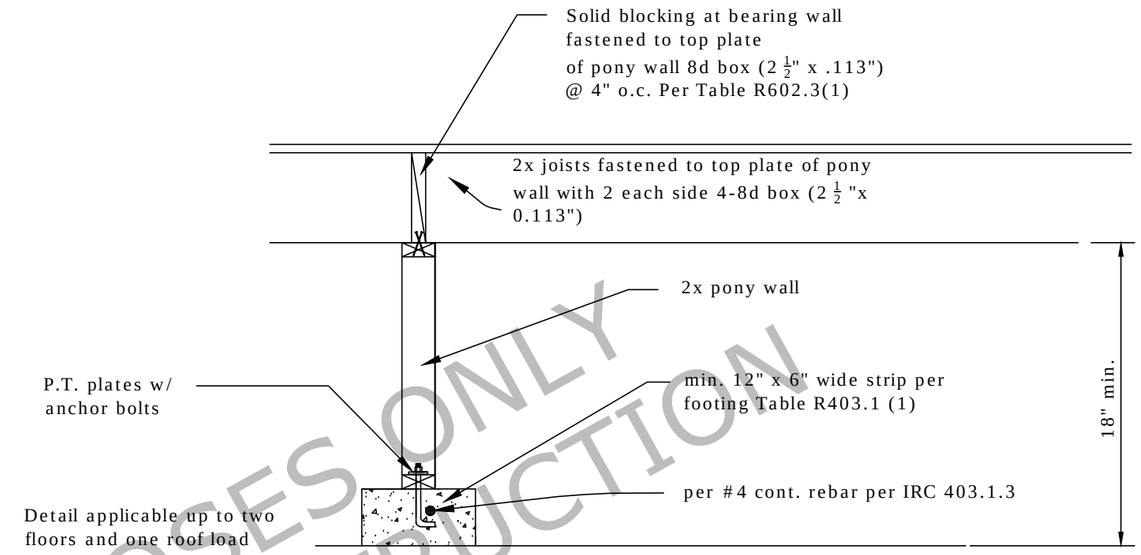

NOTE: unobstructed16"x24" under floor areaway is required to all areas of the crawl space.

2/12 POST & BEAM GIRDER CONNECTION
SCALE: NTS
FRM-51

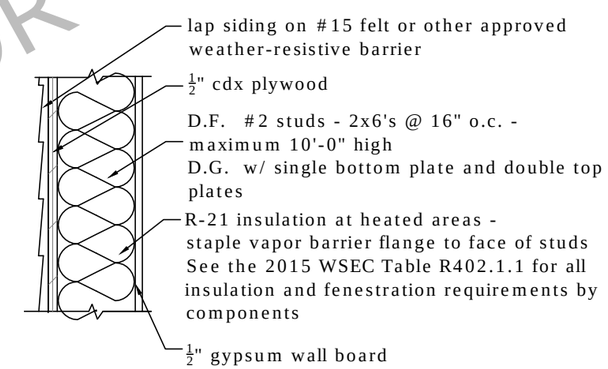

3/12 EXTERIOR WALL
SCALE: NTS
FRM-51

INFORMATION PURPOSES ONLY
SAMPLE NOT FOR CONSTRUCTION

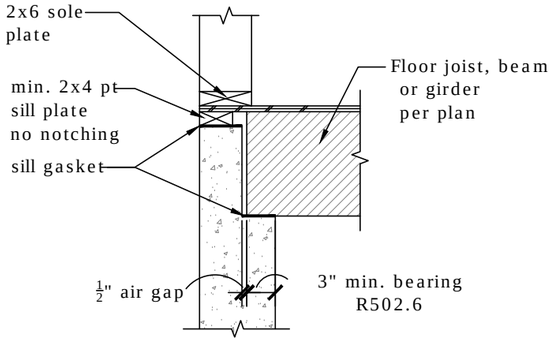

1 8" Stem wall

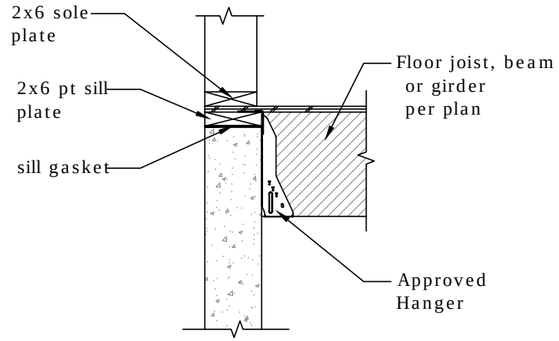

2 6" Stem wall with approved joist hanger

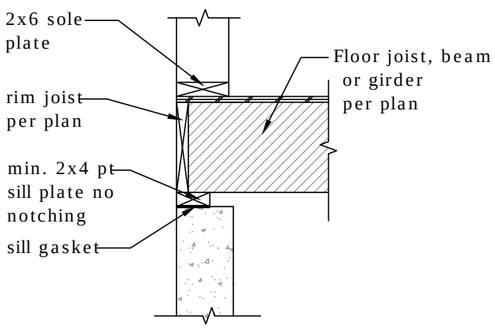

3 Joist bearing on top of 6" stem wall

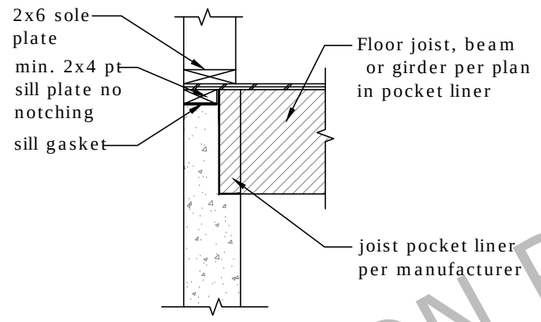

4 6" Stem wall with joist liner pocket. As approved by jurisdiction for alternative, materials, design and methods of construction

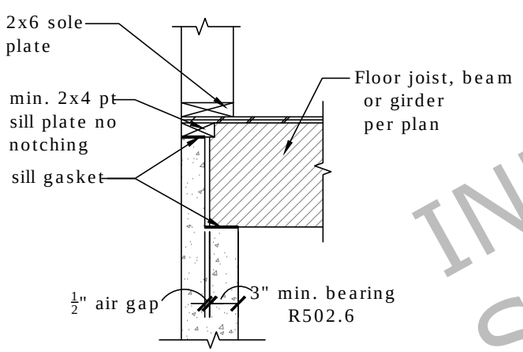

5 6" Stem wall with notched floor joist, beam or girder per plan

Notes:
R502.6 Bearing. ...The ends of each joist, beam or girder shall have not less than 3" of bearing on masonary or concrete or by the use of approved joist hangers. The bearing on masonry or concrete shall be direct, or a sill plate of 2" minimum nominal thickness shall be provided under the joist, beam or girder.
*Vertical point loads must have full bearing

1/13 BEARING @ STEM WALL OPTION R502.6
SCALE: NTS
FRM-53

MECHANICAL REQUIREMENTS:

Hot and cold water pipe insulation required per WSEC Sections 503.11 & Table 5-12 6" clearance required for gas water heaters from draft hood & 6" to single wall pipe to combustibles.
IFGC 503.12.7 Temperature and pressure relief valve-drain to outside or other approved location-check with jurisdiction.

See UPC/WAC Sections 504.6, 608.3.1 &608.3.5

HARDWARE REQUIREMENTS:

Per manufacturer drill pilot hole on centerline of stud, use 1/4"x4" lag w/ washer. See note #4.

Install 2x blocking if tank does not have stud behind in as required- See Plan View below

2x framing

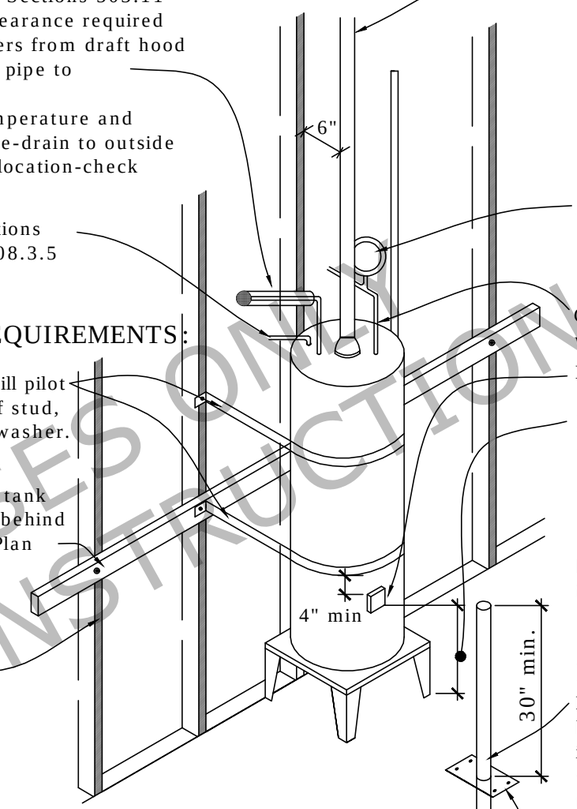

MECHANICAL REQUIREMENTS:

Exhaust to outside- B Vent clearance to combustibles per manufacture's Listing & 6" for single wall pipe. IFGC 503.12.7. Where vent passes through insulated assemblies an insulation shield is required. Min. 26 gauge sheet to provide required clearance all around. Min. 2" above insulation and secured to prevent displacement per IFGC Section 502.4

Expansion tank required w/ closed plumbing system per UPC Section 608.3

Cold water supply line w/ shut off

Ignition source

IRC M1307.3 and UPC/WAC 507.13 Elevation of ignition source. 18" minimum required between bottom edge of source of ignition and finish floor level unless listed as flammable vapor ignition resistant

HARDWARE REQUIREMENTS:

Provide protective 3" Diam. steel bollard or equal so that water heater is not subject to physical damage by vehicle. Provide adequate anchorage to floor or embedment.

Plate anchor with ½" x 2 ¾" anchor or embedment anchorage to floor.

NOTE:

1. If wall studs are not properly located to allow adequate anchorage, attach min. 2x4 cross brace to studs with 1/4" x 4" lags to studs with 1/4" x 4" lag screw and washers. Attach anchor strap to cross brace with lag screw and washers. See UPC Section 507.2. Perforated iron strap ("plumber's tape") is not an approved method of strapping per UPC 507.2.
2. Per the WSEC, R-10 rigid insulation pad required at all electric water heater in unheated spaces or on concrete floor where a stand is not required.
3. Install water heater tight to wall or 2x4 bracing. See above.
4. UPC/WAC 507.2. Water heaters shall be anchored or strapped to resist horizontal dispalcement due to earthquake motion. Strappings shall be at points within the lower ⅓ and upper ⅓ of the water heaters vertical dimensions. At the lower point, a distance of not less than 4" shall be maintained from controls to the strapping. Stand to be screwed or strapped to wall or floor or provide engineering calculations per IBC 16??. No stand required where listed as vapor ignition resistant.

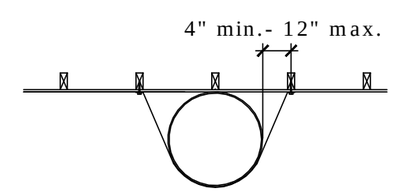

PLAN VIEW

2/13 WATER HEATER
SCALE: NTS
MSC-50

INFORMATION PURPOSES ONLY
SAMPLE NOT FOR CONSTRUCTION

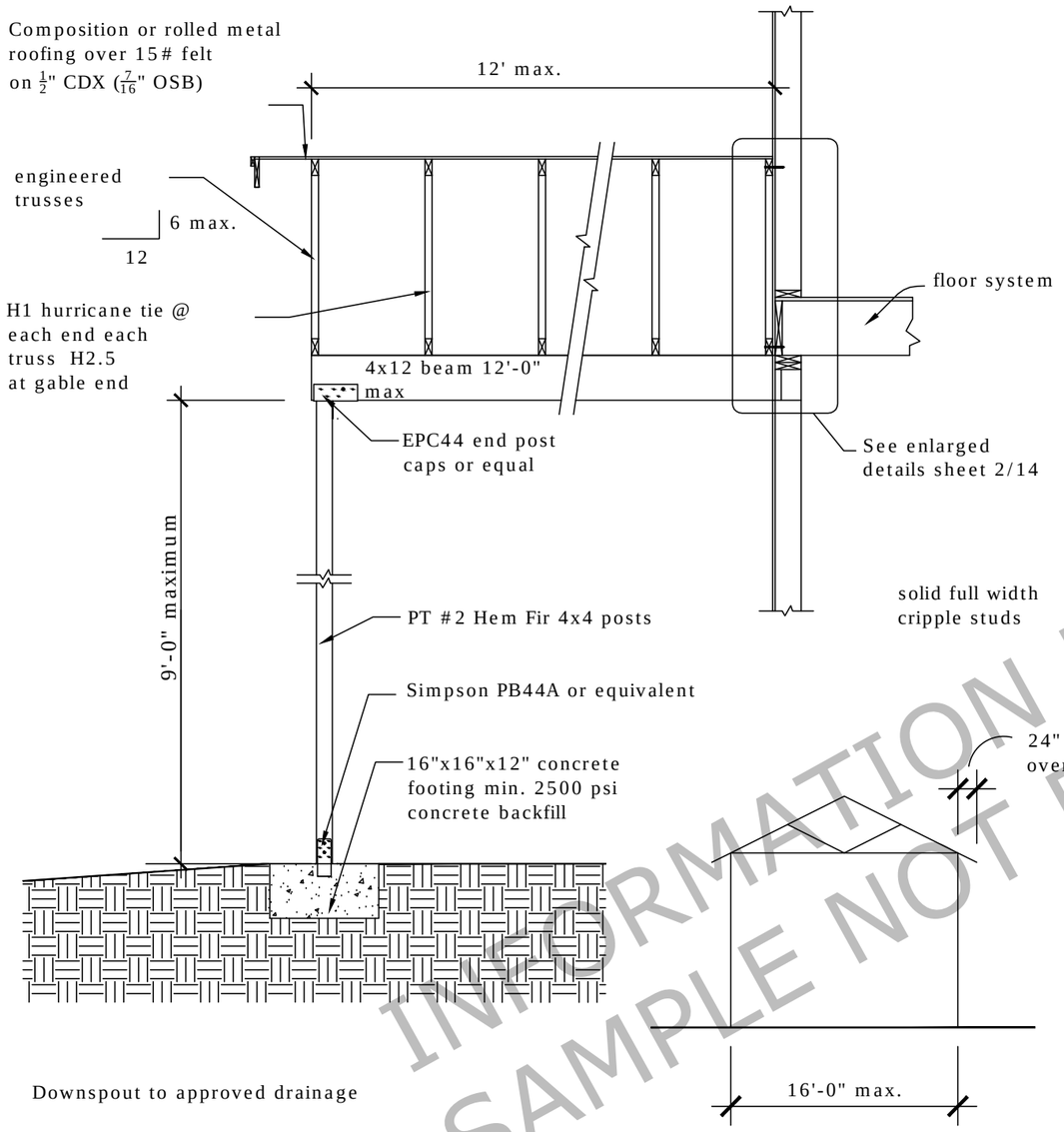

1/14 PATIO COVER - GABLE STYLE
SCALE: NTS
FRM-73

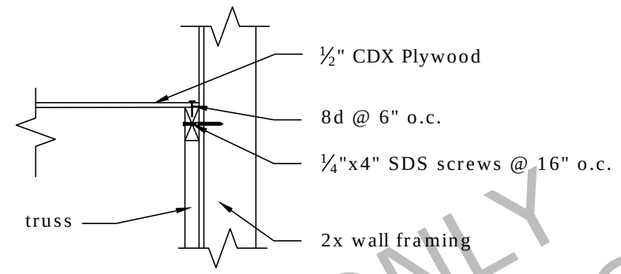

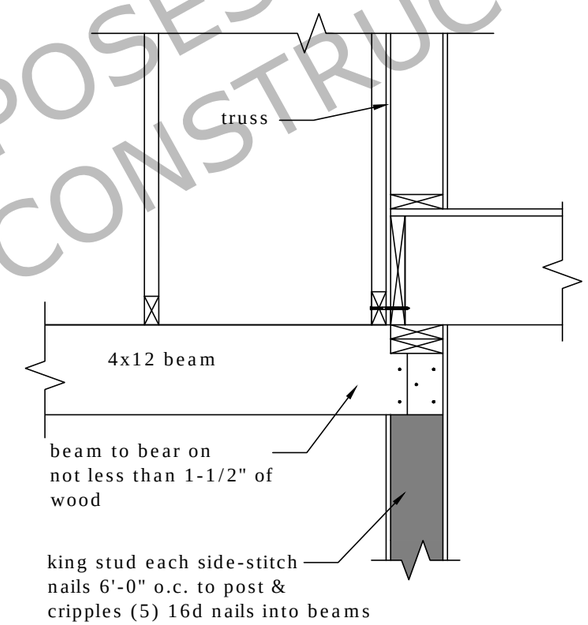

2/14 PATIO COVER - GABLE POSITIVE CONNECTIONS
SCALE: NTS
FRM - 74

INFORMATION PURPOSES ONLY
SAMPLE NOT FOR CONSTRUCTION

2015 Washington State Energy Code ~ Residential & Multi-Family Compliance Check

Revised 8-1-2018

For Required Calculations & Summary Information to provide with this check sheet, please refer to the links provided and include the required worksheets as outlined in the WSEC.

http://www.energy.wsu.edu/BuildingEfficiency/EnergyCode.aspx Primary Link to WSEC, required attachments, and self help data

Check off, Circle, *or* Complete Information Credits & Selections where noted

Table 406.2 Credit Summary - (*Circle All That Apply*)

NOTE: No more than 1 selection in Credit Divisions 1 thru 3

Option	Description	Credits
1a	**Efficient Building Envelope** Glazing: U-0.28 / Floor: R-38 / Entire Slab on grade: R-10 ***OR*** Component Analysis for 5% Total UA Reduction	0.5
1b	**Efficient Building Envelope** Glazing: U-0.25 / Floor: R-38 / R-21 Walls + R-4 / Entire Slab on grade: R-10 / Basement Walls: R-21 + R-5 ci ***OR*** Component Analysis for 15% Total UA Reduction ***NOTE:*** **PER IRC R702.7 This uses Class III Vapor Retarder**	1.0
1c	**Efficient Building Envelope** Glazing: U-0.22 / Floor: R-38 / R-21 Walls + R-12 ci / Entire Slab on grade: R-10 / Basement Walls: R-21 + R-12 ci / Vaulted Rafter: R-49 Advanced ***OR*** Component Analysis for 30% Total UA Reduction ***NOTE:*** **PER IRC R702.7 This uses Class III Vapor Retarder**	2.0
1d	**Efficient Building Envelope** Glazing: U-0.24	0.5
2a	**Air Leakage Control & Efficient Ventilation** Reduce air leakage to 3 ACH; Whole House Ventilation w/ high efficiency fan	0.5
2b	**Air Leakage Control & Efficient Ventilation** Reduce air leakage to 2 ACH; Whole House Ventilation w/ HRV minimum 0.70 efficiency	1.0
2C	**Air Leakage Control & Efficient Ventilation** Reduce air leakage to 1.5 ACH; Whole House Ventilation w/ HRV minimum 0.85 efficiency	1.5
3a	**High Efficiency HVAC Equipment** Minimum 94% AFUE Fuel - Fired Furnace ***or*** Minimum 92% AFUE Fuel - Fired Boiler	1.0
3b	**High Efficiency HVAC Equipment** Air Source Heat Pump with minimum HSPF of 9.0	1.0
3c	**High Efficiency HVAC Equipment** Ground Source Heat Pump with minimum COP of 3.3 or Water Source Heat Pump with minimum COP of 3.6	1.5
3d	**High Efficiency HVAC Equipment** Ductless Split System Heat Pumps in primary space with zonal electric heating	1.0
4	**High Efficiency HVAC Distribution System** All heating & cooling system components installed inside conditioned space. Direct vent or seal combustion	1.0
5a	**Efficient Water Heating** All showerheads & kitchen sink faucets @ 1.75 GPM or less All other lavatory faucets @ 1.0 GPM or less	0.5
5b	**Efficient Water Heating** Fuel fired water heater w/ min. EF of 0.74 ***or*** water heater per 3c ***or*** for ***R-2*** occupancy: central heat pump water heater with EF above 2.0 to all units	1.0
5c	**Efficient Water Heating** Fuel fired water heater w/ min. EF of 0.91 or Solar water heating or Electric heat pump w/ min. EF of 2.0	1.5
5d	**Efficient Water Heating** Drain water heat recovery unit(s) w/ min. efficiency of 40% for equal flow and 52% for unequal flow.	0.5
6	**Renewable Electric Energy** 0.5 Credits For each 1,200 kWh of electrical generation includes solar and/or wind generation up to 3 Credits	0.5 - 3.0

Selection for Required Energy Efficiency Credits based upon Dwelling Size (From Table 406.2 in WSEC) - *Circle Appropriate Credit*

Credit Selection Based Upon Size of Dwelling or Addition	Credits
Small Dwelling Unit Dwelling less than 1,500 Sq. Ft. and less than 300 Sq. Ft. Glazing / Additions Between 500 & 1,500 Sq. Ft.	1.5 Credits
R-2 Occupancies in Multi-Family Buildings All dwelling units within an apartment or condominium (WSEC Commercial)	2.5 Credits
Medium Dwelling Unit All dwelling units not classified as small, large, or an addition. Generally between 1,500 Sq. Ft. & 5,000 Sq. Ft.	3.5 Credits
Large Dwelling Unit Dwellings greater than 5,000 Sq. Ft.	4.5 Credits
Additions Less than 500 Square Ft.	0.5 Credits

Whole House Ventilation (Prescriptive WHV)

Please check the appropriate box to describe which type of prescriptive Whole House Ventilation System being utilized per **IRC M1507**

1	Intermittent WHV Using Exhaust Fans & Fresh Air Inlets (*Inlet is into HVAC or Wall*)
2	Intermittent WHV Using Integrated w/ a Forced Air System
3	Intermittent WHV Using a Supply Fan
4	Intermittent WHV Using a Heat Recovery Ventilation System
5	Continuous WHV HVAC System Airflow Rate

WAC Table 403.8.1

Dwelling Unit Floor Area (Square Feet)	Number of Bedrooms				
	0 - 1	2 - 3	4 - 5	6 - 7	> 7
	Airflow in CFM Required				
< 500 S.F.	30	40	45	55	60
500 - 1,000 S.F.	45	55	60	70	75
1,001 - 1,500 S.F.	60	70	75	85	90
1,501 - 2,000 S.F.	75	85	90	100	105
2,001 - 2,500 S.F.	90	100	105	115	120
2,501 - 3,000 S.F.	105	115	120	130	135
3,001 - 3,500 S.F.	120	130	135	145	150
> 3,500 S.F.	135	145	150	160	165

WAC Table 403.8.5.1
Intermittent Whole House Mechanical Ventilation Rate Factors

Run Time % in Each 4 - Hour Segment	25%	33%	50%	66%	75%	100%
Factor [a]	4.0	3.0	2.0	1.5	1.3	1.0

a For ventilation system run time values between those given, the factors are permitted to be determined by interpolation

Vapor Retarder Product Information

Vapor Retarder Contractor Name:			
Contractor Phone:		Email:	
Product Brand:		Product Name:	
Product Description:		Perm Rating:	
Required Film Thickness:	Dry Mill:	Wet Mill:	
Contractor Signature:		Date:	

Prescriptive Energy Code Compliance for Adjusted Credits as Selected
Credit Selections from Table 406.2 Categories 1a - 1d are represented here

Component:	Fenestration (Windows) Vertical Glazing	Fenestration (Windows) Overhead Glazing	Ceiling w/ Attic	Exterior & Interior Party Walls	Framed Floor	Mass Wall (Below Grade)	Slab R-Value & Depth
Prescriptive Value	U 0.30	U 0.50	R-49 (Min.)	R-21 (Min.)	R-30 (Min.)	R-10/15/21 Interior +TB	R-10 (Min. 2 ft. Extension beneath slab)
Adjusted for Selected Credits							

HVAC Summary Per WSEC Heating Size Worksheet & Mandatory Equipment Sizing with Efficiency Rating in Accordance with ACCA Manuals S & J / Duct Sizing in Accordance with Manual D to Achieve Required CFM
Heating System Sizing Worksheet is also Applicable for Required Information
Credit Selections from Table 406.2 Categories 2 - 4 are represented here

CFM	BTU's	Efficiency Rating	HRV Yes	HRV No	OSA (Outside Air) In HVAC	OSA (Outside Air) Separate	OSA Duct Size	NOTE: No HVAC Duct size to be less than 6" unless engineered

Mechanical Ventilation System / Source Specific Fan Efficiency / Minimum Source Specific Exhaust

Refer to IBC Section 717 for Duct Draft Stops and Fire Safety on Multi-Family Construction

Required in each Kitchen, Bathroom, Water Closet, Laundry room, & other rooms where water vapor or cooking odor is produced (***IRC M 1507.4)*** Fan Efficacy from **WSEC Table R403.6.1**. Fans with 400 CFM or greater require make-up air. Refer to **Table M1506.2 in IRC and WAC 51-52-0403 Table 403.8.4.2 for exhaust duct size.** ***NOTE:*** **Fans above 50 CFM require Efficacy of 2.8 CFM/watt**

Room	Airflow Rate (CFM) Minimum	Selected CFM (Actual) Intermittent	Selected CFM (Actual) Continuous	Continuous Operation Yes	Continuous Operation No	Duct Size	Minimum Efficacy
Range Hood	100 Intermittent / 25 Continuous						2.8 CFM / Watt
Bathrooms	50 Intermittent /20 Continuous						1.4 CFM / Watt
Bathrooms	50 Intermittent /20 Continuous						1.4 CFM / Watt
Utility Room	50 Intermittent / 20 Continuous						1.4 CFM / Watt
In-Line Whole House Exhaust	ANY						2.8 CFM / Watt

IRC R702.7 Vapor Retarder Requirement

Class I or II Required
Class III Optional Per Table R702.7.1

Vapor Retarders are required on the interior side of above grade walls. The vapor retarder class shall be based upon the manufacturer's certified testing or a tested assembly.

Maintain access to this form during construction for inspector to review.

https://www.clark.wa.gov/community-development/building

Class I:	Sheet Polyethylene / Unperforated Aluminum Foil ~ 0.1 Perm or less	
Class II:	Kraft - Faced Fiberglass Batts ~ 0.1 Perm to < 1.0 Perm	
Class II:	Vapor Retarder Primer ~ 0.1 Perm to < 1.0 Perm	
Class III:	Per Marine Climate Zone 4C ~ > 1.0 Perm ***Applicable when using Energy Credit 1b or 1c***	

Table 403.8.4.2 - Prescriptive Exhaust Duct Sizing

Room Type Minimum Allowable Size	Tested Fan CFM	Minimum Flex Duct Diameter	Maximum Allowed Length in Feet	Minimum Smooth Duct Diameter	Maximum Allowed Length in Feet	[a] Maximum Elbows
Minimum for Bathrooms	50	4 inches	25	4 inches	70	3
	50	5 inches	90	5 inches	100	3
	50	6 inches	No Limit	6 inches	No Limit	3
Recommended minimum for Bathrooms w/ > than 4 Fixtures or Jetted Tub	80	NA [b]	NA	4 inches	20	3
	80	5 inches	15	5 inches	100	3
	80	6 inches	90	6 inches	No Limit	3
Minimum for Kitchens / Range Hoods	100	NA [b]	NA	5 inches	50	3
	100	6 inches	45	6 inches	No Limit	3
Exhaust Fans Greater than 400 CFM Requires Make - Up Air System	125	6 inches	15	6 inches	No Limit	3
	125	7 inches	70	7 inches	No Limit	3
	> 125	Verify with Manufacturer ***or*** 7 inches minimum				3

a For each additional elbow, subtract 10 feet from the allowed length
b Flex ducts of this diameter are not permitted with fans of this size

Residential Energy Code ~ Climate Zone Marine 4C / Default U Factors / Outdoor Design Temperatures in Table C-1 are found at:

http://www.energy.wsu.edu/Documents/ga_2015WSEC_R_2ndP.pdf

NOTE: Energy Code worksheets are required to be included with this Compliance Check Sheet
ALSO: Refer to WSEC Code for supplementary documents required during construction and to be posted in residence.

INFORMATION ONLY PURPOSES ONLY
SAMPLE NOT FOR CONSTRUCTION

WSEC Design & Detail Representative Examples

Drywall Sealing

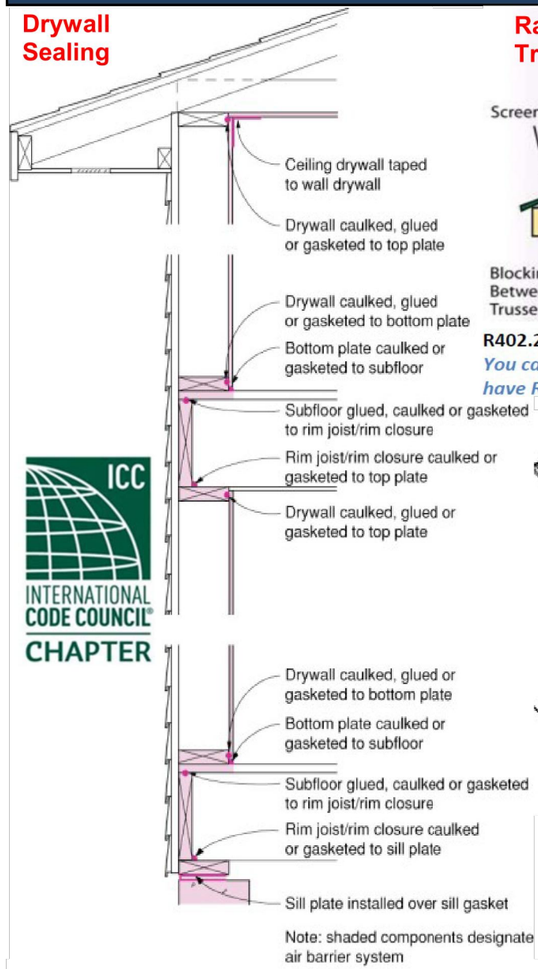

Raised Heel Truss

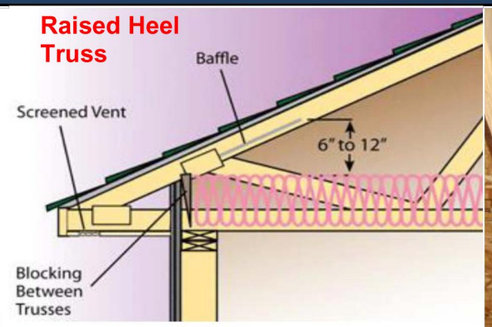

R402.2.1 Ceilings with Attic Spaces

You can reduce ceiling insulation R-value to 38 if you have R-38 extending to the exterior wall line.

R402.2.3 Eave Baffle

Baffle at eave vent. Minimum 1" unobstructed air space required.

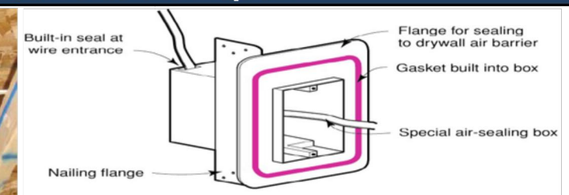

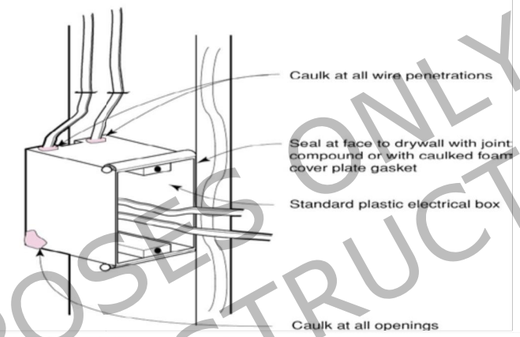

Blower Door Building Air Leakage Testing

The 2015 WSEC section R402.4.1.2 requires air leakage testing for ALL new houses and additions. The requirement is met if the structure has a leakage rate of 5 air changes per hour (5 ACH) when depressurized with a blower to 50 Pascals or less. Pascal is a measurement of pressure. 249 Pascals are equal to 1" of water column.

The test must be performed using a Blower Door device which consists of a large fan, a frame and panel. A manometer (pressure gauge) is used to read house and fan pressures.

WSEC states that the test may be performed at any time after rough in. NOTE: It is advised to conduct the test shortly thereafter in order that duct sealing and leaks may be addressed prior to full enclosure and finish. All penetrations in the building envelope must be sealed, including those for utilities, plumbing, electrical, ventilation, and combustion appliances. The code also states that when required by the building official, the test shall be conducted by an approved third party.

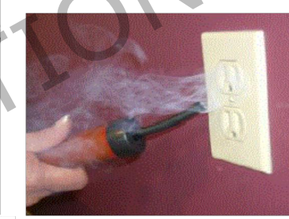

Window Sealing

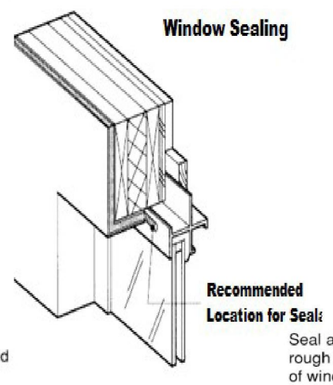

Recessed Fixture in Insulated Ceiling

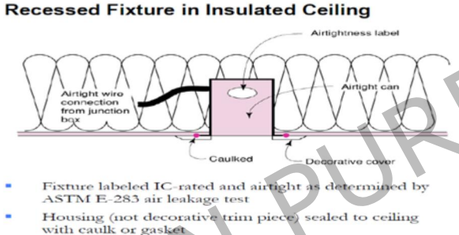

Floor Insulation Supports

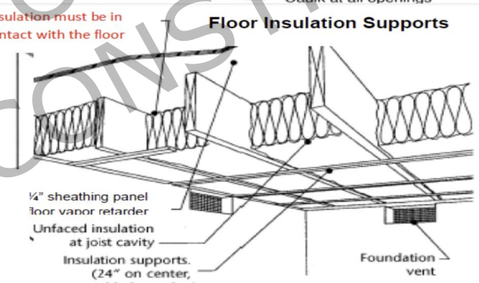

Floor Insulation Supports. Floor insulation must be installed in a permanent manner and in substantial contact with the surface being insulated. Insulation can be held in place using:

- Polyethylene twine
- Lath
- Other approved material

POST WSEC Compliance Process / Links

Total Duct Leakage Test

Testing Procedure Application:

This test is appropriate in new construction when ducts are to be tested at the rough-in stage before the house envelope is intact and can also be done post construction. The test measures the total collected leaks in the system at an induced pressure of 25 Pascals (PA). Compared to the leakage to exterior test, the total leakage test is simpler, but does not discriminate between leakage to inside and outside the heated space; as such, this test is not recommended for homes with complete house envelopes and HVAC systems. In such cases, the leakage to outside test is recommended.

Standard:

1. For certification, the measured duct leakage must not exceed 0.04 CFM_{25} x floor area (in square feet) served by the system at rough-in **when the air handler is installed.**
2. The measured duct leakage at rough-in must not exceed 0.03 CFM_{25} x floor area (in square feet) served by the system **when the air handler is not installed.**
3. **If testing post construction, the total leakage must not exceed** 0.04 CFM_{25} x floor area (in square feet) served by the system. ***Preferable if test is conducted prior to interior drywall in order that corrections may be made.***

WAC) M1507.3 WHOLE-HOUSE MECHANICAL VENTILATION SYSTEM

Whole-house mechanical ventilation systems shall be designed in accordance with Sections M1507.3.1 through M1507.3.3.

M1507.3.2 Control and operation. OR
M1507.3.4 Whole-house ventilation using exhaust fans. OR
M1507.3.5 Whole-house ventilation integrated with a forced-air system. *OR*
M1507.3.6 Whole-house ventilation using a supply fan. OR
M1507.3.7 Whole-house ventilation using a heat recovery ventilation system.

Required Residential Building Air Leakage Test Results:
http://www.energy.wsu.edu/Documents/Blower%20door%20results%20form_2015.pdf
Required Duct Testing Affidavit (New Construction)
http://www.energy.wsu.edu/Documents/Duct%20Leakage%20affidavit%20new%20construction%201_29_12.pdf

Plumbing Bypass

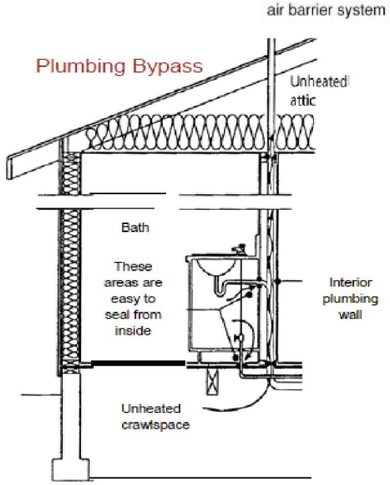

Gasket @ tub penetrations

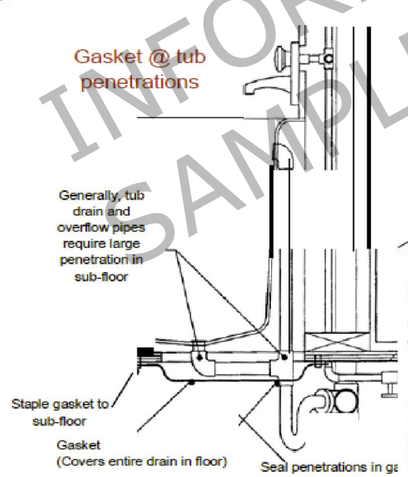

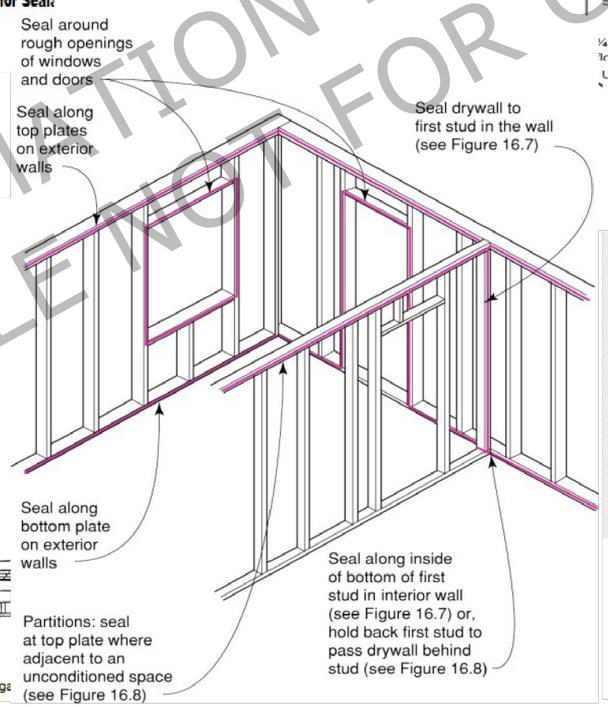

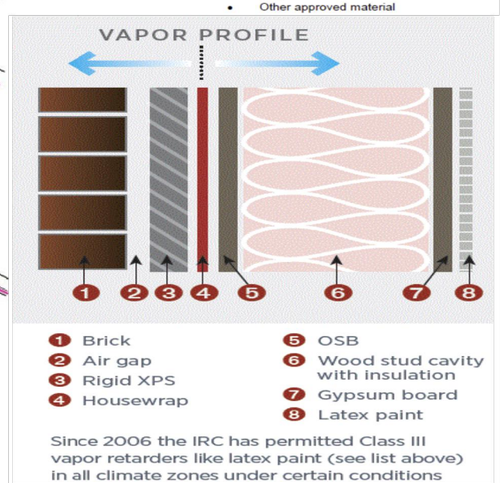

INFORMATION PURPOSES ONLY
SAMPLE NOT FOR CONSTRUCTION