2019 Fall Biannual Code Amendments

Board of County Councilors Hearing

February 18, 2020

Periodically staff "batch" minor amendments to the Clark County Code to correct scrivener's errors, update references, clarify standards, and to make some minor policy changes. These batches of code changes are commonly known as "Biannual Code Amendments". The following changes to Titles 14, 15, and 40 are proposed to be made.

Language proposed to be deleted is ~~struck-through~~. Language proposed to be added is double-underlined.

SCRIVENER'S ERRORS

1. Section 40.260.115(E)(5)(a) Marijuana Facilities – amend the reference to reflect the correct RCW and indicate the size of signs in square inches instead of square feet to be consistent with the RCW.

40.260.115(E)(5) Signs.

a. In accordance with RCW ~~69.50.357(3)~~ 69.50.369(2), licensed marijuana retailers shall not display any signage in a window, on a door, or on the outside of the premises of a retail outlet that is visible to the general public from a public right-of-way, other than a single sign no larger than ~~twelve (12) square feet~~ one thousand six hundred square inches identifying the retail outlet by the licensee's business or trade name.

b. No signs for production and processing facilities are allowed.

Rationale: The code currently references an incorrect RCW that needs to be corrected, and the size of the sign is expressed in the code in square feet and not square inches, as indicated in the RCW.

REFERENCE UPDATES AND "CLEAN-UPS" FROM OTHER CODE CHANGES

2. Section 40.100.070 Definitions- Update the County's definition of solid waste to reflect the change from WAC 173-304-100 to WAC 173-350.

Solid waste	~~"Solid waste" means all putrescible and non-putrescible solid and semi-solid wastes including, but not limited to, garbage, rubbish, ashes, industrial wastes, swill, demolition and construction waste, abandoned vehicles or parts thereof, and discarded commodities. This includes all liquid, solid and semi-solid~~

	~~materials that are not the primary products of public, private, industrial, commercial, mining, and agricultural operations. Solid waste includes, but is not limited to, sludge from wastewater treatment plants and seepage, septic tanks, wood waste, dangerous waste, and problem wastes WAC-173-304-100).~~ "Solid waste," "waste materials," or "wastes" means all putrescible and nonputrescible solid and semisolid wastes including, but not limited to, garbage, rubbish, ashes, industrial wastes, swill, sewage sludge, demolition and construction wastes, abandoned vehicles or parts thereof, contaminated soils and contaminated dredged material, and recyclable materials. See WAC 173-350-021 to determine if a material is solid waste.

Rationale: In 1999 WAC 173-304 was replaced by WAC 173-350. At this time 173-304 only applies to those landfills that closed under the 304 requirements in late 1990s to very early 2000s. They are not applicable for current land use and or development. Contaminated soils, contaminated dredge materials, and recycled materials are additions to the existing list.

3. Figure 40.260.155-3 - Update the reference to a Standard Details Manual drawing in the narrow lot standards and clarify that only the pavement structural specs of an urban alley apply to the narrow lot alley detail.

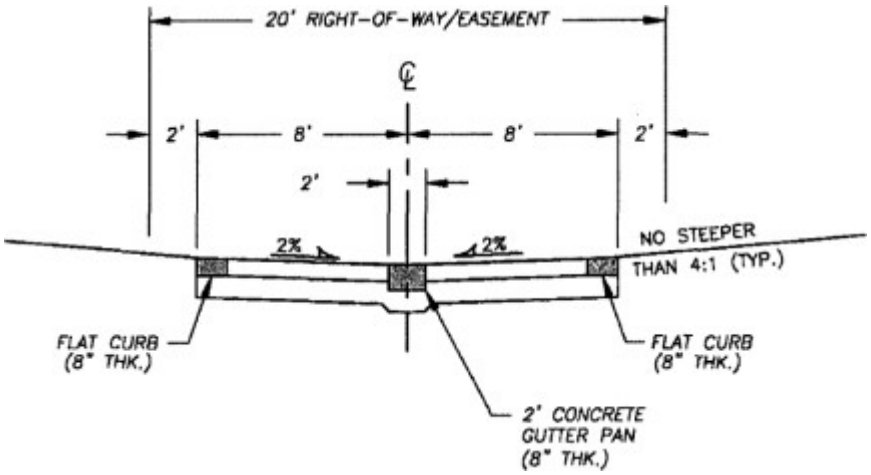

Figure 40.260.155-3 Narrow Lot Alley Cross-Section

Cross-slope details and concrete curb and pan shown are optional. Alternate cross-slope details may be approved; provided, the minimum pavement width and right-of-way is provided. ~~Construction details shall meet the minimum requirements of Drawing 19 of the Standard Details Manual~~. Structural pavement sections shall meet the minimum requirements for an Urban Alley drawing in the Standard Details Manual.

Rationale: Figure 40.260.155-3 references the construction details of an outdated Standard Details Drawing number; the standard detail it is supposed to reference is to an Urban Alley, which has been changed to Standard Detail # 17. In addition to removing the reference to a specific drawing number in the Standard Details Manual (since they are subject to frequent

change), language is proposed to clarify that only the structural pavement sections (thickness) of an Urban Alley apply to Narrow Lot alleys; otherwise it may appear that there's a conflict between the 16 foot alley width in this figure versus the 20 foot width requirement of an Urban Alley.

4. Section 40.310(B)– Amend the sign code section to refer to other sign standards in the Highway 99, marijuana, and mixed use code sections that have unique requirements.

40.310.010 Sign Standards

A. Purpose.

The purpose of this section is to add sign requirements common to the several zoning districts for the preservation of the character of the areas, structures, and uses; the needs of residential, commercial, industrial and agricultural potential; the need for healthful, safe, and convenient use of all lands, and the conservation and promulgation of values and resources. These requirements include, but are not limited to, standards relating to the number, size, placement and physical characteristics of signs. In addition, the purpose of this section is to provide an effective administrative process for the review and enforcement of these standards to protect and improve the aesthetic quality of the community.

B. Scope.

The signage covered under this section includes, but is not limited to: all commercial signs, and wall graphics; professional and business signs; home business signs; banners, balloons, flags and other temporary signage. It is not intended to regulate traffic signs or other governmental street signs, doorway identification nameplates, holiday decorations, informational signs pursuant to Chapter 13.20, temporary interior window signage or memorial signs. Also, it is not intended to regulate signage which is not visible from adjacent properties or from public rights-of-way. Further, it is not intended to regulate the display of the national or state flag.

Three other sections of Clark County Code contain additional requirements for sign codes, namely: 1) CCC 40.260.115(E)(5), which pertains to marijuana facilities, 2) Appendix A (F), which pertains to sign standards for mixed use development, and 3) Appendix F, Chapter 8.4, which pertains to sign standards for development in the Highway 99 Overlay District.

Rationale: Now that marijuana facilities are allowed in the County, it provides impetus to clarify that such facilities (along with Mixed Use developments and Highway 99 overlay areas) have separate sign requirements (other than those in the main sign standards in Chapter 40.310) that the reader should be aware of.

5. Section 40.500.010(B)(3) – In the Development Approvals Timeline section, remove an outdated reference which states that the hearing examiner conducts hearings for development agreements.

40.500.010(B)(3). Developer Agreements. Notwithstanding the foregoing, Council may approve a developer agreement under RCW 36.70B.170 through 36.70B.240 providing for a longer approval duration per Section 40.550.030. ~~The hearing examiner is delegated authority to conduct hearings and make recommendations for developer agreements, but final approval thereof is reserved to Council.~~

Rationale: On November 12, 2019, county council approved CPZ2019-00029 Development Agreement Procedures, which will add a new section CCC 40.550.030 (effective in February of 2020) to create a procedure for application, review, consideration, and conditioning of certain development projects. The second sentence in the code section above is now moot as only the county council is involved in developer's agreements, not the hearings examiner. Therefore, the second sentence in the code above should be deleted.

6. Section 40.560.020(E). In the section dealing with the release of concomitant rezone agreements, delete a sentence that has become moot.

40.560.020(E). Release of Concomitant Rezone Agreements.

Upon petition by the property owner, a concomitant rezone covenant may be fully or partially released, or modified, by the County Council following a public hearing with notice as prescribed by Section 40.510.040(E) and in accordance with the criteria set forth in this section~~;~~. ~~provided, that if no development has occurred pursuant to a covenant entered into prior to January 1, 1995, such covenant may be fully released and the property subjected to all applicable standards and provisions of the current zoning ordinance by the County Council at a public meeting if it appears that no substantive issues are raised under the following criteria.~~

Rationale: Prior to the code change which designated the Council as the review and approval authority to release all concomitant rezone agreements, the hearing examiner approved releases for sites that had been developed, and the Council released agreements on sites that had never been developed. Now that the Council approves all releases (developed or not) the second sentence is now moot and should be deleted.

CLARIFICATIONS

7. Amend Section 40.200.070.A7, Exceptions to Setback Requirements, to clarify what can and what can't project outside of building or development envelopes

40.200.070 Exceptions to Setback Requirements

A. Projections into Required Setbacks. ~~(See also Section 40.320.010(C)(9).)~~ Also see Sections 40.200.070.A.7, 40.200.070.A.8, and 40.320.010(C)(9) for limitations).

Certain architectural features and structures may project into required setbacks, subject to applicable building and fire codes as follows:

1. Front Setback.

   a. Fire escapes, porches, balconies, decks, landing places, or outside stairways over thirty (30) inches in height may project not more than six (6) feet into the required front setback, provided such features are open-sided and are uncovered.

   b. Projections including bay windows, overhanging breakfast nooks, cornices, canopies, eaves, belt courses, sills or other similar architectural features and fireplaces may extend up to two (2) feet into the required setback.

   c. Porches, decks, landings or stairways not more than thirty (30) inches in height above finished grade are allowed to within eighteen (18) inches of the front property line, provided such features are open-sided and uncovered.

2. Rear Setback.

   a. Projections such as bay windows and overhanging breakfast nooks may extend up to two (2) feet into the required setback, provided such features are limited to ten (10) horizontal feet per projection and limited to thirty percent (30%) of the linear dimension of the rear building elevation.

   b. Cornices, canopies, eaves, belt courses, sills or other similar architectural features and fireplaces may extend up to two (2) feet into the required setback.

   c. Porches, decks, landings or stairways not more than thirty (30) inches in height above finished grade are allowed to within eighteen (18) inches of the rear property line, provided such features are open-sided, and uncovered.

3. Side Setback.

   a. The following features and structures may project into the required side setback not more than two (2) feet; provided, that no portion of the structure may be less than three (3) feet to the property line:

      (1) In the R1-5 and R1-6 zones only, projections such as bay windows and overhanging breakfast nooks may extend up to two (2) feet into the required setback, provided such features are limited to ten (10) horizontal feet per projection and limited to thirty percent (30%) of the linear dimension of the side building elevation;

      (2) Cornices, canopies, eaves, belt courses, sills or other similar architectural features; and

      (3) Fireplaces.

   b. Porches, decks, landings or stairways not more than thirty (30) inches in height above finished grade are allowed to within eighteen (18) inches of the side property line, provided such features are open-sided, and uncovered.

4. Garden Sheds, Gazebos and Play Houses. One (1) garden shed, or one (1) gazebo or one (1) play house meeting all of the following requirements may be located in either the side or rear setback of single-family residential districts (R1-5, R1-6, R1-7.5, R1-10 and R1-20):

   a. The structure contains no more than two hundred (200) square feet of floor area, with overhangs that do not exceed sixteen (16) inches;

   b. The structure is set back from property lines a minimum of two (2) feet;

   c. The floor elevation is eighteen (18) inches or less in height;

   d. The structure is less than twelve (12) feet in height;

   e. Roof drainage is contained on site; and

   f. No utilities are connected to the structure.

   g. If the structure is located within a utility easement, the property owner must obtain a waiver letter from all applicable utilities.

5. Aboveground rainwater cisterns in all urban residential districts are allowed reduced setbacks subject to the following:

   a. Cisterns six (6) feet in height or less are allowed a setback of three (3) feet to an interior side, or rear property line;

   b. Other reductions from standard setbacks shall be limited to the height of the cistern. For example, a cistern eight (8) feet high is allowed a setback of no less than eight (8) feet to a rear property line in the R1-20 zone; provided, that the maximum height of any cistern under this provision shall not exceed twelve (12) feet;

   c. If the cistern is located within a utility easement, the property owner must obtain a waiver letter from all applicable utilities;

   d. Appropriate design and support to ensure the cistern does not affect on-site or off-site foundations, retaining walls, or other structures, are required;

   e. All other applicable building and plumbing codes shall apply.

6. Aboveground utilities.

~~7. The above exceptions do not apply to development envelopes or landscape buffers. (See Section 40.320.010(C)(9) and Chapter 40.450.)~~

7. The allowed projections noted above may not apply to landscape buffers. (See Section 40.320.010(C)(9).

8. The allowed projections noted above apply to building and development envelopes except when limited by the following:

a. The applicable envelope line reflects a critical area or an easement;

b. The applicable envelope line reflects a landscape buffer, except as allowed by Section 40.320.010.C.9; and,

c. Information on a site plan or plat specifically prohibits such projections.

Rationale: Building setbacks generally apply to all properties in the County. This code section (Exceptions to Setback Requirements) specifies what structures, and parts of structures can be built within established setbacks.

During the platting or site plan review process, building or development envelopes are sometimes drawn on final plats and site plans to reflect setbacks, easements, and/or critical areas to provide future clarity on issues related to setbacks and other "no-build" areas.

Subsection 40.200.070.A.7 currently disallows the exceptions to setbacks noted in Sections 40.200.070.A.1 through A.6 for development envelopes; however, as previously noted, in many cases envelope lines are established on a plat based on standard setbacks, and for which the exceptions in 40.200.070.A.1-6 *are* intended to apply.

The proposed amendments effectively allows these projections beyond building or development envelope lines when the envelope line reflects a standard setback requirement, but will continue to disallow projections into easements or critical areas. It also restates the existing limitations on projections into landscape buffers. This fix should eliminate a good deal of confusion, as well as the need for some plat alterations to fix unintended consequences of envelopes on plats.

8. Amend the Narrow Lot Standards Section 40.260.155.C.1.h to clarify that building envelopes should reflect building setbacks, not all projections.

C. Narrow Lot Development Standards.

1. A site plan is required that demonstrates that utilities, driveways, street trees, and other features have been located and designed to minimize conflicts with one another. The site plan shall be submitted with the preliminary land division application and shall be incorporated into the final construction plan set. The site plan shall show, at a minimum, all of the following features:

****

h. Building envelopes which ~~encompass all projections. The envelopes shall~~ reflect the final setbacks for each lot; and

****

Rationale: Changing this section to have envelopes that reflect setbacks, not projections will be consistent with the clarifications to Exceptions to Setbacks section in #7 above.

9. 40.100.070, Definitions - Add a definition of "garage sale".

"Garage sale" means a sale of used household or personal articles such as furniture, tools, or clothing, held on the seller's own premises. This includes yard sales, estate sales, moving sales, and similar.

Rationale: The addition of this definition was requested by code enforcement staff to clarify the types of activities that are regulated under the garage sales special uses section (CCC 40.260.090). The lack of a definition has hindered code enforcement staff in cases where ongoing sales of used goods is occurring, but NOT within a garage. Situations have occurred where sales activities claimed to be an "estate sale" went on and on for weeks on end. This proposed definition is intended to capture those types of activities. See the garage sales code section 40.260.090 in Tab 5 for reference.

10. In the Type IV (comprehensive plan amendment) process section regarding public notice, include the "manner of making comments" within the published notice.

40.510.040 Type IV Process – Legislative Decisions

40.510.040(E)(1)(c). Publish in a newspaper of general circulation ~~a summary of the notice, including~~ the date, time, and place of the hearing, manner of making comments, staff contact information, and a summary of the subject of the Type IV process.

40.510.040(E)(2)(a). Publish in a newspaper of general circulation ~~a summary of the notice, including~~ the date, time, and place of the hearing, manner of making comments, staff contact information, and a summary of the subject of the Type IV process pursuant to Section 40.510.040(E)(1)(a).

40.510.040(G)(3)(d). Publish in a newspaper of general circulation ~~a summary of the notice, including~~ the date, time, and place of the hearing, manner of making comments, staff contact information, and a summary of the subject of the Type IV process pursuant to Section 40.510.040(E)(1)(a); and

Rationale: In various other sections of County code dealing with public notice requirements, the "manner of making public comments" is a requirement to be stated in the public notice that is published in the newspaper. This gives the reader information on what number or person to contact, and how to provide the comments (such as email, snail mail, fax). The Type IV process notice requirements currently has no such provision; adding it will make this consistent with GMA requirements and other County notice requirements.

MINOR POLICY ITEMS

11. Amend Chapters 14.05, 14.06, 14.08, 14.12, and 15.12 (Building and Fire codes) to remove references to separate Building, Plumbing and Fire Boards of Appeals. Instead, defer to the provisions in adopted national codes regarding appeals.

~~**14.05.112.3 Board of appeals.**~~

~~Section 112.3 (Qualifications) of the IBC shall be replaced with the following:~~

~~Qualifications. The seven-member Board of Appeals shall consist of one person from each of the following backgrounds: (1) Agriculture; (2) Architecture; (3) Engineering; (4) General Construction; (5) Residential Construction; (6) and two others chosen at large.~~

~~14.06.112.3 Board of appeals.~~
~~Section R112.3 (Qualifications) of the IRC shall be replaced with the following:~~

~~Qualifications. The seven-member Board of Appeals shall consist of one person from each of the following backgrounds: (1) Agriculture; (2) Architecture; (3) Engineering; (4) General Construction; (5) Residential Construction; (6) and two others chosen at large.~~

~~14.08.221 Plumbing board of appeals.~~
~~In order to determine the suitability of alternate materials and methods of construction and to provide for reasonable interpretations of the provisions of this code, there is created a board of appeals, to be known as the Clark County plumbing and mechanical board of appeals, consisting of seven (7) members who are qualified by experience and training to pass upon matters pertaining to plumbing construction. The administrative authority shall be an ex-officio member and shall act as secretary of the board. The board of appeals shall be appointed by the board of county councilors and shall hold office at its pleasure. The board of appeals shall adopt reasonable rules and regulations for conducting its investigations, and shall render all decisions and findings in writing to the administrative authority with a duplicate copy to the appellant and may recommend to the board of county councilors such new legislation as is consistent therewith.~~

~~The board of appeals shall schedule a regular meeting date of each month.~~

~~14.08.231 Appeals.~~
~~Appeals shall be presented in writing to the secretary of the board of appeals who shall notify the chairman or acting chairman of the board of the pending appeal. When a special meeting is requested the chairman or acting chairman, or the secretary acting at the chairman's direction, shall poll the members of the board and arrange for the earliest possible meeting time at which a majority of the board can be present. The board shall have the duty of expediting the appeal procedure with particular attention to the matters brought before it at any special meeting.~~

14.12.090 Amendment of Section 109 IMC.
~~Section 109 IMC is amended to read:~~

~~BOARD OF APPEAL~~

~~Sec. 109 Board created.~~

Sections 109.2, 109.3, 109.5, and 109.6 (Means of Appeal) of the IMC are replaced with the following:

~~(a)~~ In order to determine the suitability of alternate materials and methods of construction and to provide for reasonable interpretations of the provisions of this code, ~~there shall be and is hereby~~

~~created a Board of Appeals, to be known as the Clark County Plumbing and Mechanical Board of Appeals, consisting of seven members who are qualified by experience and training to pass upon matters pertaining to Mechanical Code construction. The Clark County Plumbing and Mechanical Code Board of Appeals shall consist of the same membership as, and shall be the same Board as the Clark County Plumbing Board of Appeals as established in Section 14.08.221. The Building Official shall be an ex-officio member and shall be appointed by the Board of County Councilors and shall act as secretary of the board. The board of appeals shall be appointed by the board of councilors and shall hold office at its pleasure. The Board of Appeals shall adopt reasonable rules and regulations for conducting its investigations and shall render all decisions and findings in writing to the Building Official with a duplicate copy to the appellant and may recommend to the board of county councilors such new legislation as is consistent therewith.~~

~~The Board of Appeals shall schedule a regular meeting date for each month.~~

~~(b) Appeals. Appeals shall be presented in writing to the secretary of the board of appeals who shall forthwith notify the chairman or acting chairman of the board of the pending appeal. When a special meeting is requested, the chairman or acting chairman, or the secretary acting at the chairman's direction, shall forthwith poll the members of the board and arrange for the earliest possible meeting time at which a majority of the board can be present. The board shall have the duty of expediting the appeal procedure with particular attention to the matters brought before it at any special meeting.~~ appeals may be made to the same body and under the same processes used to hear appeals of building and fire protection decisions.

Title 15
FIRE PREVENTION

Chapters:

15.12 Clark County Fire Code

15.13 Wi~~nd~~land Urban Interface/Intermix Ordinance

15.14 Fire Inspection and Fees (REPEALED)

15.14A Fees (REPEALED)

15.16 Minimum Fire Flow—Exceptions

~~15.12.108.1 Amendment of Section 108.1.~~
~~Section 108.1 of the International Fire Code shall be amended to read as follows:~~

~~108.1 Board of appeals established.~~ ~~In order to determine the suitability of alternate materials and type of construction to provide for reasonable interpretations of the provisions of this code,~~

~~there shall be and hereby is created a Board of Appeals, consisting of five members who are qualified by experience and training to pass upon pertinent matters. The Fire Marshal shall be an ex-officio member and shall act as Secretary of the Board. The Board of Appeals shall be appointed by the Board of County Councilors and shall hold office at their pleasure. The Board of~~

~~Appeals shall consist of one member of the Fire Service, one member of the Insurance Industry, one member of the Architects Association, one member of the Mechanical Engineers Association and one member of the Building Code Board of Appeals. The Board shall adopt reasonable rules and regulations for conducting its investigations and shall render all decisions and findings in writing to the Fire Marshal with a duplicate copy to the appellant and may recommend to the Board of County Councilors such new legislation as is consistent therewith.~~

~~Appeals shall be presented in writing to the Secretary of the Board of Appeals who shall forthwith notify the chairman or acting chairman of the Board of the pending appeal. When a meeting is requested, the chairman or acting chairman, or the secretary acting at the chairman's direction, shall forthwith poll the members of the Board and arrange for the earliest possible meeting time, not to exceed ten (10) days from the date of the filing of the appeal at which a majority of the Board can be present.~~

Rationale: The Clark County Building and Fire codes mostly adopt national building and fire codes; those parts of these national codes that the County has chosen to not adopt, or otherwise customize are called out in certain sections of Titles 14 and 15. The particular Clark County code sections that are proposed to be mostly removed are exceptions to the standard appeals provisions of the IBC (International Building Code), IRC (International Residential Code), IMC (International Mechanical Code), UPC (Unified Plumbing Code) and the International Fire Code. These County exceptions currently dictate three separate building, plumbing and fire appeals boards. Each of the three different appeals boards has different membership requirements. In practice, these boards do not exist, as it has proven difficult to fill the numerous positions.

By eliminating the current exceptions, the County would adopt by reference the appeal procedures in those codes which are more general in nature and allow flexibility in establishing one unified appeals board with members having experience spanning the various disciplines.

The only partial exceptions proposed to remain are to Sections 109.2, 109.3, 109.5, and 109.6 (Means of Appeal) of the IMC, as these particular IMC sections are somewhat specific regarding membership requirements and process, which the County would like to avoid in order to maintain flexibility as to how an appeals board will function.

The national codes state that the boards shall be appointed by the "applicable governing authority" and in this case it would be the County Council.

Copies of the applicable national codes indicating what text will (and will not) be adopted are included as attachments in Tab 6.

12. 40.260.020.C.6. - In the Urban Accessory Dwelling Unit provisions, remove the R1-10 and R1-20 zoning requirement to allow larger size ADU's on larger lots, regardless of zoning.

C. Development Standards.

6. Allowable Size.

The total gross floor area of an ADU shall not exceed eight hundred (800) square feet or forty percent (40%) of the area of the primary dwelling's living area, whichever is less, with the following exceptions for large lots with large primary dwellings or primary dwellings with basements:

a. On lots ~~zoned R1-10~~ that are at least ten thousand (10,000) square feet, the maximum square footage of an ADU is one thousand (1,000) square feet, or forty percent (40%) of the area of the primary dwelling's living area, whichever is less; and

b. On lots ~~zoned R1-20~~ that are at least twenty thousand (20,000) square feet, the maximum square footage of an ADU is fifteen hundred (1,500) square feet, or forty percent (40%) of the area of the primary dwelling's living area, whichever is less.

Rationale: Most urban ADUs are limited to 40% of the main dwelling area, or 800 square feet whichever is less. An exception is made in the R1-10 and R1-20 zoning districts only, where ADUs can exceed the 800 sf limit (up to 1,000 square feet in the R1-10 zone and up to 1,500 sf in the R1-20 zone) IF the lots are at least 10,000 square feet in the R1-10 zone and 20,000 square feet in the R1-20 zone, AND the existing house is sufficiently large such that the 40% limit isn't exceeded.

There seems to be little reason to not extend the larger ADU sizes on these 10,000 and 20,000 square foot lots even in the R1-5, 6, and 7.5 zones if the lots meet the 10 or 20,000 sf lot size.

13. 40.260.155.C.6.e - In the Narrow Lot Development standards, require that alleys less than 20 feet wide must be private, not public.

40.260.155 Narrow Lot Development Standards

C. Narrow Lot Development Standards.

6. Alleys and Lots with Alley Access.

a. Where provided, alleys shall meet the minimum dimensional requirements of Figure 40.260.155-3. A minimum of twenty-four (24) feet of clear area (unobstructed by fences or other structures) with an unobstructed vertical clearance of not less than 13.5 feet shall be provided. Alleys with a paved width of less than 20 feet wide shall be privately owned and maintained.

b. When garbage and recycling collection is proposed to be from an alley, the ability of collection vehicles to maneuver safely to all points of collection shall be demonstrated, based on a thirty-five (35) foot long by ten (10) foot wide vehicle.

c. All lots adjacent to an alley shall provide access to the garage or parking space from the alley, not from an adjacent street.

d. Residences with access from alleys shall be oriented to face the public or private street, not the alley.

e. Alleys serving narrow lots under this section shall connect with a public or private street at both ends, unless otherwise approved by the public works director.

Rationale: Under the Narrow Lot standards, alleys can be as narrow as 16 feet since they are not the primary means of access; however, such narrow alleys can be expensive to maintain, thus they should be privately owned and maintained.

Additional references have been made to maintain the standard vertical fire clearance access of 13.5 feet within the 24 foot clear zone, and to prohibit all structures (not just fences) in the clear zone.

14. Revisions to the Critical Aquifer Recharge Area (CARA) code sections 40.410.010, 020, and 030.

40.410.010 Introduction

A. Purpose.

This chapter is intended to protect public health, safety, and welfare by preventing degradation, and where possible, enhance the quality and quantity of groundwater which will be, or might likely be, used in the future for drinking water or business purposes. This will be accomplished by limiting potential contaminants within designated critical aquifer recharge areas (CARAs). The requirements of this chapter are intended to fulfill obligations of state law under the Growth Management Act, Chapter 36.70A RCW; the Public Water Systems Penalties and Compliance, Chapter 70.119A RCW; the Washington State Wellhead Protection Program and the Public Water Supplies, Chapter 246-290 WAC; the Dangerous Waste Regulations, Chapter 173-303 WAC; the Water Quality Standards for Groundwater of the State of Washington, Chapter 173-200 WAC; the Underground Injection Control Program, Chapter 173-218 WAC; and the Regulation of Public Ground Waters, Chapter 90.48 RCW.

B. Applicability and Exemptions.

1. Applicability. This chapter applies to all critical aquifer recharge areas as defined in Section 40.410.010(C). Parcels that are partly within Category I and Category II shall be subject to the Category I provisions in this chapter. Parcels that are partly inside Category II, but outside Category I, shall be subject to the Category II provisions in this chapter. Where pre-applications are required for projects, applicants are encouraged to use the pre-application process for pre-screening CARA exemptions.

2. Exempt Activities and uses. The following activities and uses do not require a CARA permit:

a. Existing activities that currently and legally existed on July 31, 1997;

b. All residential uses other than those having activities covered by Section 40.410.020(A);

c. Group A public water system source development and associated infrastructure;

d. Public water supply aquifer storage and recovery (ASR) facilities;

e. Public water pipelines;

f. Public water supply storage structures;

g. Other uses not listed in Sections 40.410.020(A), (B) or (C); and

h. Activities already permitted and regulated by the state ~~and~~ or the Clark County Health Department to incorporate best management practices.

i. Any uses where containment is provided and approved by the Clark County building and fire departments.

3. The following underground storage tank (UST) systems and facilities, including any piping connected thereto, are exempt from the requirements of this chapter:

a. Any UST system holding hazardous wastes subject to Subtitle C of the Federal Solid Waste Disposal Act, or a mixture of such hazardous waste and other regulated substances;

b. Any wastewater treatment tank system that is part of a wastewater treatment facility regulated under Section 402 or 307(b) of the Clean Water Act;

c. Equipment or machinery that contains regulated substances for operational purposes such as hydraulic lift tanks and electrical equipment tanks;

d. Any UST system whose capacity is one hundred ten (110) gallons or less;

e. Any UST system that contains a de minimis concentration of regulated substances;

f. Any emergency spill or overflow containment UST system that is expeditiously emptied after use;

g. Farm or residential UST systems of one thousand one hundred (1,100) gallons or less capacity used for storing motor fuel for noncommercial purposes (i.e., not for resale);

h. UST systems used for storing heating oil for consumptive use on the premises where stored; except that such systems which store in excess of one thousand one hundred (1,100) gallons are subject to the release reporting requirements of WAC 173-360-372;

i. Septic tanks;

j. Any pipeline facility (including gathering lines) regulated under:

(1) The Natural Gas Pipeline Safety Act of 1968 (49 U.S.C. App. 1671, et seq.), or

(2) The Hazardous Liquid Pipeline Safety Act of 1979 (49 U.S.C. App. 2001, et seq.), or

(3) Which is ~~an intrastate~~ a pipeline facility regulated under state laws comparable to the provisions of the law referred to in Section 40.410.010(B)(3)(j)(1) or (2) of this definition;

k. Surface impoundments, pits, ponds, or lagoons;

l. Stormwater or wastewater collection systems;

m. Class V injection wells for stormwater infiltration meeting current stormwater code requirements, subject to Clark County review and approval;

~~m.~~ n. Flow-through process tanks;

~~n.~~ o. Liquid traps or associated gathering lines directly related to oil or gas production and gathering operations; or

~~o.~~ p. Storage tanks situated in an underground area (such as a basement, cellar, vault, mineworking drift, shaft, or tunnel) if the storage tank is situated upon or above the surface of the floor.

C. Definitions.

For the purposes of this chapter, the following definitions shall apply:

Category I CARA	"Category I CARA" means the highest priority critical aquifer recharge area, represented by the one-year time-of-travel for Group A water wells.
Category II CARA	"Category II CARA: means the primary critical aquifer recharge area, represented by the ten (10) year time-of-travel for Group A water wells. This area also consists of the unconsolidated sedimentary aquifer and the Troutdale gravel aquifer.

D. Map.

The map entitled Clark County, Washington Critical Aquifer Recharge Areas is adopted in the twenty (20) year Clark County Comprehensive Growth Management Plan as best available science. If a conflict exists between the map and on-site conditions, the on-site conditions shall supersede the map. The county will update the CARA map as warranted by new information. GIS Map Store produces maps for free in the following link: Critical Areas Ordinances Maps.

40.410.020 Standards

A. Activities requiring a CARA permit in Categories I and II include the following:

1. Above- and below-ground storage tanks (tanks and pipes used to contain an accumulation of regulated substances ~~(see Section 40.100.070))~~; unless containment is approved by the Clark County Building Department and the Fire Marshal;

2. Facilities that conduct biological research;

3. Boat repair shops;

4. Chemical research facilities;

5. Dry cleaners;

6. Gasoline service stations;

7. Pipelines not otherwise exempted from this chapter;

8. Printing and publishing shops (that use printing liquids);

9. Below-ground transformers and capacitors;

10. Sawmills (producing over ten thousand (10,000) board feet per day);

11. Solid waste handling and processing;

12. Vehicle repair, recycling, and recyclable materials – automotive;

13. Funeral services;

14. Furniture stripping;

15. Motor vehicle service garages (both private and government);

16. Photographic processing;

17. Chemical manufacture and reprocessing;

18. Creosote and asphalt manufacture and treatment;

19. Petroleum and petroleum products refining, including reprocessing;

20. Wood products preserving;

21. Golf course;

22. Regulated waste treatment, storage, disposal facilities that handle hazardous material;

23. ~~Medium quantity generators (~~ Uses that generate a medium or large quantity of dangerous, acutely hazardous, and toxic extremely hazardous waste~~);~~ and as defined by WAC Chapter 173;

~~24. Large quantity generators (dangerous, acutely hazardous, and toxic extremely hazardous waste).~~

B. Prohibited Activities in Category I.

The following activities are considered high-impact uses due to the probability and/or potential magnitude of their adverse effects on groundwater. These activities are prohibited in Category I, and require a permit for Category II:

1. Landfills;

2. Class V injection wells with the exception of wells for stormwater infiltration meeting current stormwater requirements, subject to Clark County review and approval;

3. Agricultural drainage wells;

4. Untreated sewage waste disposal wells;

5. Cesspools;

6. Industrial process water and disposal wells;

7. Radioactive waste disposal;

8. Radioactive disposal sites;

9. Surface mining operations; and

10. Electroplating activities.

C. Additional Standards.

The following additional standards apply in all CARAs:

1. Pesticides, herbicides and fertilizers shall be applied in accordance with federal law.

2. Vehicle repair and servicing.

a. Vehicle repair and servicing must be conducted over impermeable pads and within a covered structure capable of withstanding normally expected weather conditions. Chemicals used in the process of vehicle repair and servicing must be stored in a manner that protects them from weather and provides containment if leaks occur.

b. No ~~dry~~ Class V stormwater infiltration wells ~~shall be~~ are allowed in CARAs on sites for vehicle repair and servicing unless oil water separators are installed. Dry wells on the site prior to the facility establishment must be abandoned using techniques approved by the Department of Ecology or an oil water separator will need to be installed prior to commencement of the proposed facility.

40.410.030 Administration

A. Permit Requirements.

1. To receive a CARA permit required by Section 40.410.020, the applicant must demonstrate, through a Level 1 site evaluation report, how they will integrate necessary and appropriate best management practices (BMPs) to prevent degradation of groundwater. The applicant must also meet existing local, state, and federal laws and regulations.

2. If an applicant wants to avoid implementation of the standard, they must submit a Level 2 site evaluation report ~~and develop and implement a monitoring program that:~~

a. ~~Demonstrates~~ that demonstrates how the applicant will prevent degradation to groundwater. The applicant must also meet existing local, state and federal laws and regulation.~~; and~~

b. ~~Includes quarterly reporting to the department. The department will evaluate the monitoring program and may require periodic changes based on the monitoring results, new technology, and/or BMPs.~~

3. Applicants that agree to implement all relevant BMPs are exempt from preparing a site evaluation report. Applicants will demonstrate how the implementation of BMPs will be used to prevent degradation to groundwater ~~and will submit quarterly monitoring reports to the department~~.

B. Level 1 Site Evaluation Report/Approval Criteria.

1. For all proposed activities to be located in a critical aquifer recharge area, the site evaluation report shall include a Level 1 assessment by an engineer as defined in Section 40.386.010. The report will identify appropriate BMPs and show how they will prevent degradation of groundwater. Examples of pollution source controls are described in the Building Code, Fire Code, Clark County Stormwater Manual and Chapter 173-218 WAC, Underground Injection Control Program.

2. The report will identify how the applicant will follow the requirements of Chapter 90.48 RCW (Water Pollution Control), Chapter 70.105D RCW (Model Toxics Control Act), Chapter 173-340 WAC, and the Dangerous Waste Regulations, Chapter 173-303 WAC, in the event hazardous material is released onto the ground or into groundwater.

3. The report will be reviewed by the department, in consultation with the Clark County Health Department and the local water purveyor, in conjunction with the same process as the primary development permit. If approved, the applicant will receive a CARA permit allowing the activity on the subject property.

C. Level 2 Site Evaluation Report/Approval Criteria.

1. A qualified groundwater professional as defined in Section 40.100.070 will determine whether the proposed activity will have any adverse impacts on groundwater in CARAs. This determination must be based upon the requirements of the Safe Drinking Water Act and the Wellhead Protection Area Program, Public Water Supplies, Chapter 246-290 WAC; Groundwater Quality Standards for the State of Washington, Chapter 173-200 WAC; and Dangerous Waste Regulations, Chapter 173-303 WAC. By this reference, Chapters 173-200, 173-218, 173-303, and 246-290 WAC, as written and hereafter updated, will be part of this chapter.

2. The Level 2 site evaluation report will include the following:

a. Identification of the proposed development plan, along with potential impacts (e.g., on-site septic systems and other on-site activities) that may adversely impact groundwater quality underlying or down gradient of the project or project area;

b. Site plans or diagrams at an appropriate scale (1:2,400 or one (1) inch to two hundred (200) feet) showing the location of abandoned and active wells, springs, and surface water bodies within one thousand (1,000) feet of the project or project area; and

c. A description of the geologic and hydrologic characteristics of the subject property including the following:

(1) Lithologic characteristics and stratigraphic relationships;

(2) Aquifer characteristics including recharge and discharge areas, depth to and static water-flow patterns, and an estimate of groundwater-flow velocity;

(3) Contaminant fate and transport including probable migration pathways and travel time of a potential contaminant release from the site through the unsaturated zone to the aquifer(s) and through the aquifer(s), and how the contaminant(s) may be attenuated within the unsaturated zone and the aquifer(s);

(4) Appropriate hydrogeologic cross-sections which depict lithology, stratigraphy, aquifer, units, potential or probable contaminant pathways from a chemical release, and rate of groundwater flow; and

(5) Existing groundwater quality~~; and~~.

~~(6) A proposal for quarterly monitoring of groundwater quality to detect changes and a description of corrective actions that will be taken if monitoring results indicate contaminants from the site have entered the underlying aquifer(s).~~

3. The report will be reviewed by the department, in consultation with the Clark County Health Department and the local water purveyor, in conjunction with the same process as the primary development permit. If approved, the applicant will receive a CARA permit allowing the activity on the subject property.

D. Appeals.

Appeals of county decisions under this chapter may be filed under the provisions of Chapter 40.510.

E. Penalties.

Any person, firm, or corporation who violates, disobeys, omits, neglects, or refuses to comply with any of the provisions of this chapter shall be subject to penalties as defined in Chapter 70.119A RCW; Chapters 173-200 and 246-290 WAC; Title 32 of this code; and other local, state, and federal laws.

Rationale: The Development and Engineering Advisory Board (DEAB) and County engineering staff created a subcommittee and met over the course of several months to address confusing and redundant requirements in the CARA code. The resulting changes should clarify longstanding issues and make it easier to implement.

The main changes to note in this section are:

1) Eliminate the need for a CARA permit for stormwater infiltration facilities. Requiring a CARA permit is redundant, due to the fact that these type of facilities must already meet the county's stormwater requirements, including pre-treatment; and, 2) Remove the requirement for quarterly monitoring reports for Level 2 Site evaluations. With all the other protections afforded by upgraded water quality provisions in County code, and with limited resources to evaluate monitoring reports, there is little, if any benefit to this requirement.

15. Amend Section 40.540.120, Alteration and Vacation of Final Plats to allow for a Minor plat alteration process.

40.540.120 Alteration and Vacation of Final Plats

A. Purpose.

The purpose of this section is to provide procedures and criteria for the alteration and vacation of recorded plats and short plats consistent with state law (RCW 58.17.215, 58.17.217). No recorded short plat or subdivision shall be changed in any respect, except as processed and approved through this section unless exempt from this chapter as indicated in Section 40.540.020(B)(4). This process cannot be used to create additional lots, tracts or parcels.

B. Process.

1. Pre-Application Review. Pre-application review is required for all plat alteration or vacation applications in accordance to Section 40.510.020(A)~~.~~ except for minor plat alterations submitted under Section 40.540.120.E.3.

2. Preliminary Approval. Preliminary approval of a plat alteration shall be considered a Type II application pursuant to Section 40.510.020 provided the following:

a. A public hearing shall be required for alteration proposals if a hearing is requested by any person within ~~twenty-one (21)~~ fifteen (15) days from the date the public comment period began or if the department determines that the public hearing is within the public interest. Where a public hearing is requested or required, the department shall consider the application a Type III process and refer the application to the hearing examiner for consideration. Notices required pursuant to Section 40.510.030(E) shall include language notifying the public of the alterative hearing process provided for by this section; however, the four (4) foot by eight (8) foot notice sign as specified in Section 40.510.030(E)(3)(d) shall not be required.

b. If a public hearing is not requested for a proposed alteration, the responsible official is delegated the authority to review and approve, approve with conditions or deny the application for preliminary approval. The final revised drawing or other alteration, if approved, shall be signed by the legislative body, without a public hearing.

c. All applications for vacation of a recorded plat shall be considered Type III applications and are not eligible for the alternative hearing process.

d. In addition to the notice requirements of Section 40.510.030(E), notice of the proposed alteration or vacation shall include all property owners holding an interest in the entire subdivision to be altered, including all phases.

3. Final Approval. Within seven (7) years of the date of preliminary approval of the vacation or alteration, the applicant shall submit for final plat approval through the final plat process of Section 40.540.070. If the nature of the plat alteration is minor, the review authority may set appropriate conditions and processes for final review and recording of the alteration at the time of preliminary approval.

C. Pre-Application Submittal Requirements for a Plat Alteration or Plat Vacation.

An applicant for a pre-application review of a proposed plat alteration or plat vacation shall submit an original and the number of individually bound copies as established by the responsible official of the following materials:

1. A completed original application form provided by the responsible official and signed by the applicant;

2. The requisite fees as specified in Title 6 of Clark County Code;

3. A copy of the recorded plat including eleven (11) inch by seventeen (17) inch (11″ x 17″) reductions of any oversized materials;

4. Restrictive covenants (if any);

5. The proposed revised plat map;

6. A narrative describing the nature, purpose, and desired effect of the proposed alteration or vacation; and

7. The following maps (as available from the Community Development Department through the “developer’s GIS packet”):

a. General location map;

b. Elevation contours map;

c. Aerial photography map (most recent year currently available through the Community Development Department);

d. Aerial photography with contours;

e. Current zoning map;

f. Current comprehensive plan map;

g. Map of C-Tran bus routes, park and trials;

h. Water, sewer, and storm systems map;

i. Soil type map;

j. Environmental constraints map; and

k. Quarter section map.

D. Application Submittal Requirements for a Plat Alteration or Plat Vacation.

An applicant for a plat alteration or vacation shall submit the number of individually bound copies as established by the responsible official of the following materials:

1. A completed original application form provided by the responsible official signed by the majority of those persons having an ownership interest of lots, tracts, parcels, sites or divisions in the subject plat or portion thereof to be altered. Applications for the vacation of plats shall include signatures of all property owners having an ownership interest;

2. The requisite fees as specified in Title 6 of Clark County Code;

3. A copy of the recorded plat including eleven (11) inch by seventeen (17) inch (11″ x 17″) reductions of any oversized materials;

4. Current recorded deeds or real estate contracts for each lot to be altered;

5. Restrictive covenants;

6. The proposed revised plat map;

7. A narrative explaining how the proposed alteration or vacation meets or exceeds the applicable approval criteria and standards and any issues raised during the pre-application process;

8. Documentation from any person, utility, company or other entity having a vested interest in any easement proposed to be altered or vacated that they agree to the alteration or vacation;

9. The following maps (as available from the Community Development Department through the “developer’s GIS packet”):

a. General location map;

b. Elevation contours map;

c. Aerial photography map (most recent year currently available through the Community Development Department);

d. Aerial photography with contours;

e. Current zoning map;

f. Current comprehensive plan map;

g. Map of C-Tran bus routes, park and trails;

h. Water, sewer, and storm systems map;

i. Soil type map;

j. Environmental constraints map; and

k. Quarter section map.

10. Pre-application conference summary; and

11. Existing conditions map including all of the following within fifty (50) feet of the proposed alteration:

a. Streets;

b. Location(s) of any existing building(s);

c. Location and width of existing easements for access, drainage, utilities, etc., if not already on the plat;

d. Name, location and width of existing rights-of-way, if not already on the plat;

e. Location and width of existing driveways; and

f. Other items that are relevant to the approval standards for the alteration or vacation.

E. Approval Criteria for Plat Alterations and Vacations.

1. The review authority may approve plat alteration requests if the following criteria is met:

a. The plat alteration is within the public interest; and

b. The approval criteria in Section 40.540.040(D), as applicable to the proposed plat alteration, is met; and

c. The approval of the plat alteration will not result in the violation of any requirements of the original approval unless conditions necessitating such requirements have changed since the original plat was recorded.

2. The review authority may approve the vacation of a plat if it is in the public interest.

<u>3. Minor plat alterations may be processed with reduced submittal requirements as determined by the responsible official. The criteria of what constitutes a minor plat alteration are as follows:</u>

<u>a. The alteration consists of correcting a scrivener's error which is clearly inconsistent with the intent of the preliminary review, and, in the judgment of the responsible official, does not affect the public interest; or,</u>

b. The alteration will provide consistency with current code requirements, and, in the judgment of the responsible official, does not affect the public interest.

F. Limitations.

1. If the plat or portions of the plat contain restrictive covenants which were filed with the plat and the proposed alteration will result in the violation of a covenant, the application shall contain an agreement signed by all parties to the covenant providing that all parties agree to alter or revoke the covenants specified in the application.

2. Vacations of county roads may be approved through this process only when the road vacation is proposed with the vacation of a subdivision or portions thereof. Vacations of roads may not be made that are prohibited under RCW 36.87.130 and Chapter 12.28.

3. If any land within the alteration contains a dedication to the general use of the persons residing within the subdivision, such land may be altered and divided equitably between the adjacent properties.

4. Blanket utility easements existing along the lot lines, but not specifically required as a condition of development approval, may be moved during a boundary line adjustment; provided, there is compliance with RCW 64.04.175 and the easement is not occupied by a utility. If the easement is occupied, the provisions of this section and RCW 64.04.175 shall apply.

Rationale: The current process for any change on a plat requires both a preliminary review, which includes a public notice requirement per state law, and a final review, with applicable fees for each review. Staff believes that some Plat alterations that are clearly a result of a scrivener's error, or those that are needed to allow a use or setback whose standard has changed since the plat was recorded should qualify for a shorter combined review process, with a proportionate fee.

A new sub-subsection (40.540.120.E.3) would allow plats with clear errors or outdated code restrictions to qualify for a Minor Plat Alteration process. The process must still be a Type II with public notice to comply with RCW 58.17.215; however, the preliminary and final declarations would be submitted at the same time, with one fee that reflects the declaration review fee, and the notice fee.

It's also proposed to change the time that someone can request a hearing for all plat alterations from the current 21 days to 15 days to make this consistent with other County notice processes.

16. Amend Section 4.2, Activity Centers, of Appendix F, in the Highway 99 Overlay District Standards to allow commercial uses on a select few Residentially-zoned parcels within Activity Centers.

Additional uses permitted:

- All uses allowed in the Community Commercial zone

• All housing types shown in Table 4.1.
• All the uses shown as Review and Approval are permitted and are not subject to the Review and Approval procedures or requirements. All conditional uses, as allowed by the applicable zoning district, except for those listed below, are permitted, and are not subject to the conditional use requirements of Section 40.520.030. The following uses are still subject to conditional use review and requirements:
• Event facilities in excess of 50,000 square feet
• Hospitals
• Outdoor paintball facilities
• Drive-in theaters
• Stadium arena facilities
• Zoos
• Solid waste handling and disposal sites
• Type III wireless communication facilities
Additional uses prohibited:
• RV parks and campgrounds
• Outdoor repair services
• RV storage
• Distribution facilities above 25,000 square feet of ground floor area
• Outdoor storage unless accessory to a permitted use

Rationale: The intent of the Activity Center Overlay of the Highway 99 Subarea plan is to "emphasize uses and design that attract pedestrian activity", which infers commercial type uses. All but five properties within Activity Centers have either Community Commercial or General Commercial zoning. Only a four-lot cluster of lots near the intersection of Highway 99 and NE 122nd Street, and a portion of taxlot 145524-000 in the Totem Town Center are zoned R-18. Addition of the language would allow, at a minimum, Community Commercial uses on these few Residentially zoned properties, which was the original intent in including them within the Activity Centers.

17. Establish fee for Minor Plat Alterations

6.110A.010 Preliminary/final planning review fees.
Fees for review activities included in Table 6.110A.010 shall be collected prior to processing the application:

Table 6.110A.010—Preliminary/Final Planning Review Fees

Section	Activity	Fee	Issuance Fee
	PRELIMINARY REVIEW		

Table 6.110A.010—Preliminary/Final Planning Review Fees

Section	Activity	Fee	Issuance Fee
1	**Appeals**		
A	**Appeals to Hearings Examiner**		
	Planning portion only—See engineering and environmental fees for additional charges	$1,166	$94
B	**Reconsideration by Hearings Examiner**		
		Reimburse county at hourly rate of examiner	$94
2	**Planning Fees** [8, 9]		
R	**Plat Alterations—Planning Portion Only—See Engineering Fees for Additional Charges**		
I	Plat alteration	$3,331	$94
II	Additional fee charged to applicant if hearing is requested for plat alteration pursuant to Section 40.540.120(B)	$1,882	N/A
III	Plat declaration	$1,471	$94
IV	Minor plat alteration process with concurrent declaration review	$1,655	$94

Rationale: The current process for any change on a plat requires both a preliminary and final review and related fees. Plat alterations that are clearly a result of a scrivener's error should qualify for a shorter combined review process, with a proportionate fee. The proposed fee is based on the plat declaration fee of $1471 plus a notice fee of $184.